THE TECHNIQUE AND PRELIMINARY RESULTS OF LEU U-MO FULL-SIZE IRT TYPE FUEL TESTING IN THE MIR REACTOR

A. L. Izhutov, V. A. Starkov, V.V. Pimenov, V. Ye. Fedoseev
Research Reactor Complex,
RIAR, 433510, Dimitrovgrad-10, Ulyanovsk Region – Russia
and
I. V. Dobrikova, A. V. Vatulin, V. B. Suprun
A.A. Bochvar All-Russian Scientific Research Institute of Inorganic Materials
P. O. Box 369, 123060, Moscow, Russia
and
Ye. F. Kartashov, V. A. Lukichev
Research and Development Institute of Nuclear Energy and Industry
P. O. Box 788, 107014, Moscow, Russia
and
V. M. Troyanov, A. A. Enin, A. A. Tkachev
OAO "TVEL"
119017, ul. B. Ordinka 24/26, Moscow, Russia

ABSTRACT

In March 2007 in-pile testing of LEU U-Mo full-size IRT type fuel elements was started in the MIR reactor. Four prototype fuel elements for Uzbekistan WWR SM reactor are being tested simultaneously - two of tube type design and two of pin type design. The dismountable irradiation devices were constructed for intermediate reloading and inspection of fuel elements during reactor testing. The objective of the test is to obtain the experimental results for determination of more reliable design and licensing fuel elements for conversion of the WWR SM reactor. The heat power of fuel elements is measured on-line by thermal balance method. The distribution of fission density and burn-up of uranium in the volume of elements are calculated by using the MIR reactor MCU code (Monte-Carlo) model. In this paper the design of fuel elements, the technique, main parameters and preliminary results are described.

1. Introduction

Under the Russian RERTR program in the 90-s of the last century there was carried out a work package on tube-type fuel elements development using low enriched uranium dioxide in the aluminum matrix. In the MIR reactor full-scale fuel assemblies were tested with fuel elements of that type. The test results have shown the principal possibility of manufacturing fuel elements of similar design with low enriched fuel if significant technological updating is provided to improve quality and reliability of fuel elements [1]. Besides, in the 2000-s two full-size U-Mo fuel tubes have been developed and manufactured at Novosibirsk plant. In 2003 in the IVV-2M reactor those fuel elements were tested up to average burn-up ~40% and ~60%. The fuel tube KM004, which has been tested at high parameters (maximum fission rate in the fuel particles $(5\text{-}6)\times10^{14}$ $cm^{-3}s^{-1}$ and maximum burn-up ≥80%), failed [2].

The other trend of fuel enrichment reducing for Russian research reactors is the development of pin type fuel elements based on high density U-Mo fuel. The main target of this trend is that pin type fuel elements of that design can be used to complete fuel assemblies of various size and configuration for different reactor types.

Within the framework of Russian RERTR Program in cooperation with ANL have been completed irradiation testing and PIE of pin type mini fuel elements (MFE), containing dispersed fuel compositions on the basis of U-Mo alloys [3]. Thus fuel compositions that attained burn-up ~70% have stable nature of fuel meat under the testing parameters: maximum

heat flux – (0.6–0.9) MW/m^2; maximum temperature of the cladding outer surface (80–110)ºC; maximum fuel temperature at BOL (100–125)ºC; maximum fission density rate in the fuel particles $(2.8–3.1)\times10^{14}$ $cm^{-3}s^{-1}$.

These results have determined the selection of the fuel composition when fabricating full-size IRT-type FE to be tested in the MIR-reactor. The reactor testing is aimed at the justification of the FE serviceability under the operating conditions of the Uzbekistan VVR-SM reactor core, which correspond to MFE test parameters.

2. The design and main characteristics of the fuel elements

2.1 The tube type fuel element (IRT-3M FE) design

The IRT-3M FE contains six fuel tubes of square cross-section located concentrically, a head and a fixture. Each fuel tube has outer and inner claddings, fuel column and end plugs. A fuel column represents a three-layer tube 1.4 mm thickness in total. The minimal thickness of outer and inner claddings makes up 0.3 mm. Aluminum powder PA-4 is used as a matrix material in fuel pins with content of Si≤0.3%. U-9%Mo fuel particles manufactured by atomization method. The transversal cross-section of FE and its basic dimensions (mm) are presented in Fig.1. U-235 loading in a FE is 348,4 g.

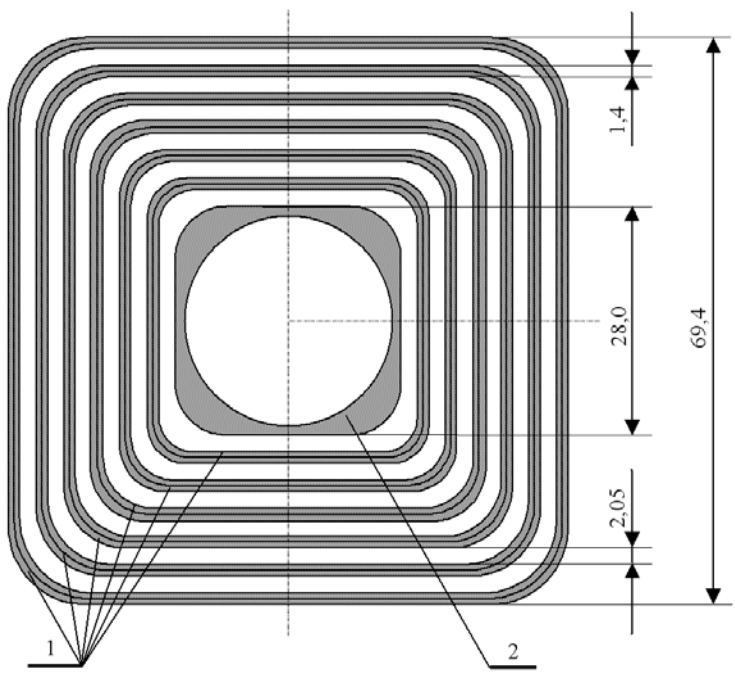

Fig. 1. Cross-section of IRT-3M FE:
1-fuel tubes; 2-displacer

The main characteristics of IRT-3M fuel tube are as follows:

length of fuel column, mm	564 ÷ 600;
fuel meat	U-9%Mo+Al;
cladding material	SAV-1;
U enrichment in U-235, %	19.7;
U density in the meat, g/cm^3	~5.4;
fuel particles size, μm	60 ÷ 160*.

* In one fuel tube of FE (199 MIS 38606) was used fuel particles coated (1-3) μm UO_2.

2.2 The pin type fuel element (IRT-U FE) design

IRT-U FE is non-dismountable and comprises a bundle of fuel pins and displacers connected by top and bottom spacer grids. The bundle of fuel pins is located between two casings. The design of fuel pin has square cross section with spirally twisted fins and ribs in the corners. The bearing element is the outer casing that unites the head, fixture and spacer grids with fuel rods in FE. Aluminum alloy SAV-1 is used as a material of jackets, head and fixture. The fuel pin claddings are made of aluminum alloys SAV-1 for first FE and AMg2 for second FE. Aluminum powder PA-4 is used as a matrix material in fuel pins with content of Si ≤0.3%. U-235 loading in a FE is 362,9 g.

The basic characteristics of IRT-U fuel pin are as follows:

circumscribed diameter, mm	4.5;
pin across-to-flat dimension, mm	2.6;
cladding thickness, mm	0.31÷0.46;
length of column, mm	620÷635;
fuel meat	U-9%Mo+Al;
fuel rod cladding material	SAV-1; AMg2;
U enrichment in U-235, %	19.7;
U density in the fuel meat, g/cm^3	~6.5;
U-235 loading in a pin, g	2.11;
number of fuel rods in EFA, pcs	172.

The transversal cross-section of IRT-U FE and its basic dimensions (mm) are presented in Fig. 2.

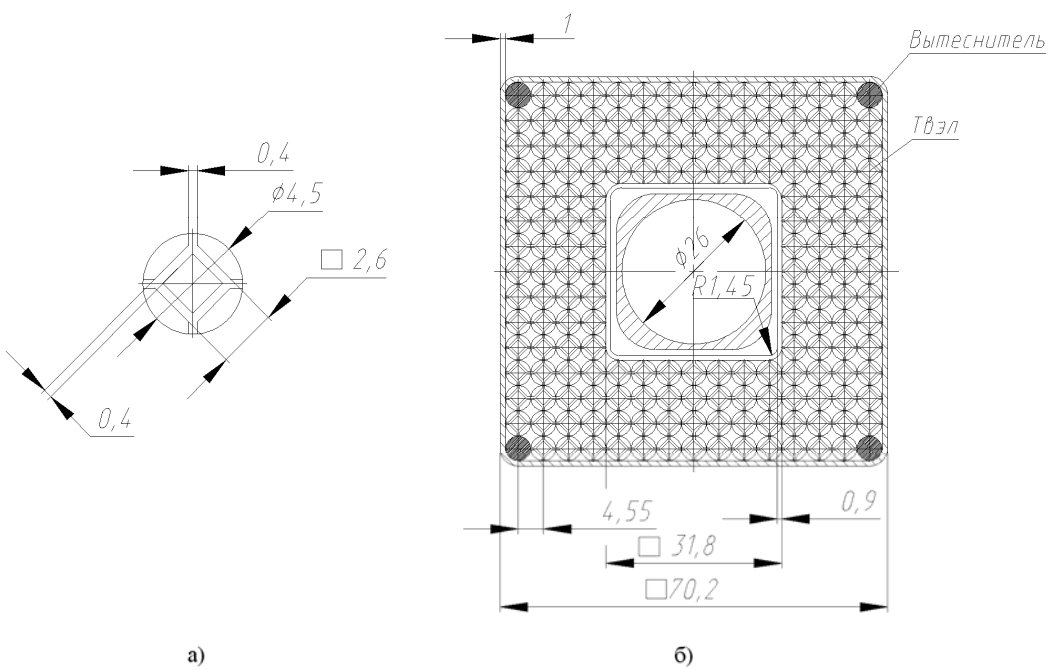

Fig. 2. Transversal cross-section of fuel rod (a) and IRT-U FE (b)

3. The design of the irradiation device

The design of irradiation device is dismountable (Fig. 3) and it consists of an upper part and a vessel and a fixture fixed rigidly to each other. FE is installed into the inner space of the channel. Since the FE have square cross-sections, the space between the FE edges and the inner surface of the body tube is filled with displacers. The body and displacers made of aluminum alloy. The device end components are made of stainless steel. The aluminum and steel tubes are connected by a split unit with sealing rings made of radiation-resistant rubber.

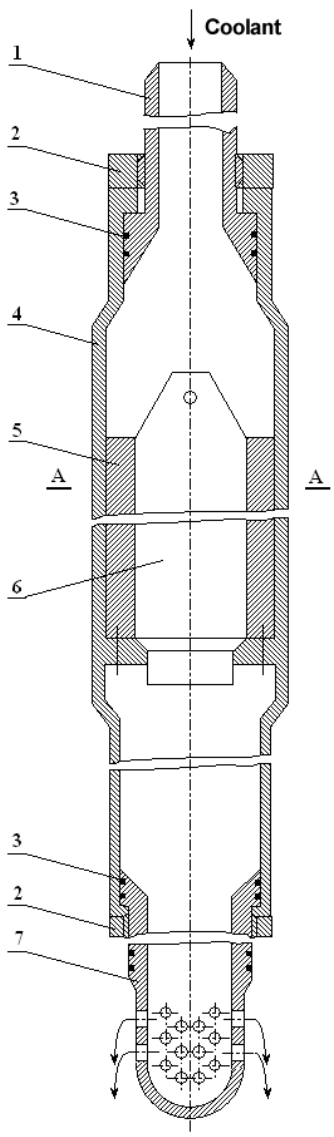

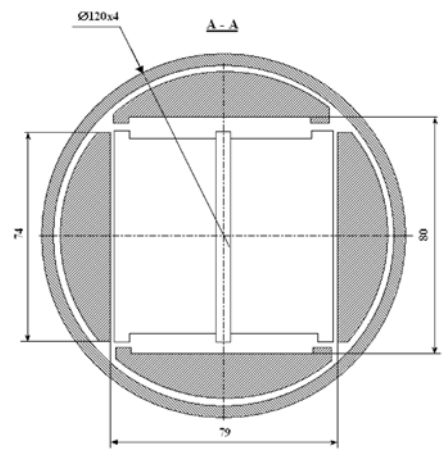

Fig 3. Irradiation device design for FE testing

1 – upper tube; 2 – nut; 3 – O-ring; 4 – aluminium body; 5 – displacer; 6 – FE; 7 – end plug.

Means and methods of test parameters control

Fig. 4 shows the layout of the instrumentation to measure coolant parameters at the test channel inlet and outlet. The coolant pressure and temperature at the test channel inlet are determined by the results of the measurement of the parameters cited at the distributing manifold input. The coolant temperature and flow rate is measured directly in the channel outlet pipeline. The corrective amendments to stipulate the coolant temperature and pressure at the inlet and outlet of the irradiation device are attained by means of calculation and test while processing the results of the specially prepared experiments. After each channel the coolant is sent to cladding leakage detector. The method of determination is based on measurement of fission products' delayed neutrons.

In order to determine the total energy release power in the FE the procedure as followings is used:

$$N = k_1 \cdot C_P \cdot G \cdot (T_{C2} - T_{C1}) + k_2 (T_{C2} - T_{P1}) - k_3 N_{P\,FA},$$

where: G, T_{C1}, T_{C2}, T_{P1} are parameters to be measured;
k_1 is an energy carry-over coefficient of n-, γ- irradiation beyond the channel,
k_2 is the heat-transfer coefficient from the channel pipeline into the reactor pool water;
k_3 is the heating coefficient of the experimental channel by the reactor irradiation;

$N_{P\ FA}$ - average heat power of surrounding driver FE

Coefficients k_1, k_2, k_3 are determined in special verification experiments using irradiation device fragments.

The distribution of the neutron flux, energy release and burn-up in the volume of FE are determined by calculations using a three-dimensional code MCU by "Monte-Carlo" method [4]. As a rule, in the course of preparation of experiments with new types of irradiation devices the investigation of flux distribution and reactivity effects are carried out on the physical reactor mockup. The attained results are used for verification of the MCU calculation model.

The usage of the calculation procedure to determine heat and neutron fluxes, fuel burn-up based on the measured test parameters makes it possible to increase the precision of the results. The experiments carried out in the reactor and post-irradiation analysis of the irradiated fuel showed the agreement between the U-235 burn-up as per the above procedure and that as per the mass-spectrometry procedure in the limit of 7% within the range of burn-up depth values (30-70)%.

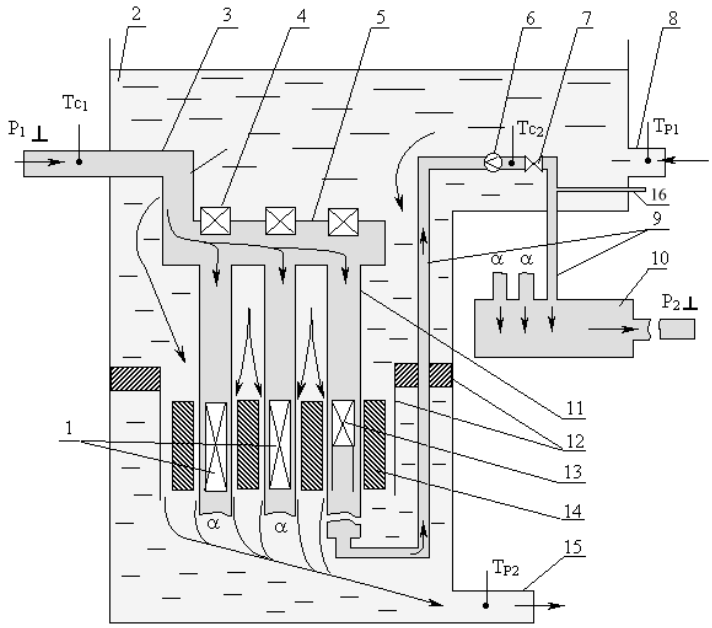

Fig 4. Layout of the instrumentation to measure coolant parameters.

T_{C1}, T_{C2}; T_{P1}, T_{P2} – thermometers; P_1; P_2 – pressure transducer.

1 – operating FA; 2 – reactor pool; 3 – primary coolant inlet; 4 – channel plug; 5 – inlet collector; 6 – flowmeter; 7 – adjustable valve; 8 – coolant inlet to the pool; 9 – RC outlet pipe; 10 – outlet collector; 11 – reactor channel; 12 – reactor casing; 13 – experimental FE; 14 – beryllium block; 15 – coolant outlet from the pool; 16 – pipe of cladding leakage system.

4. The main test parameters and results

The lifetime testing of IRT-3M FE was performed in cells 3-16 and 2-10 of the MIR reactor and that of IRT-U FE – in cells 3-13 and 2-8 (Fig. 5). The main test parameters and results of IRT-3M and IRT-U FE are given in tables 1 and 2.

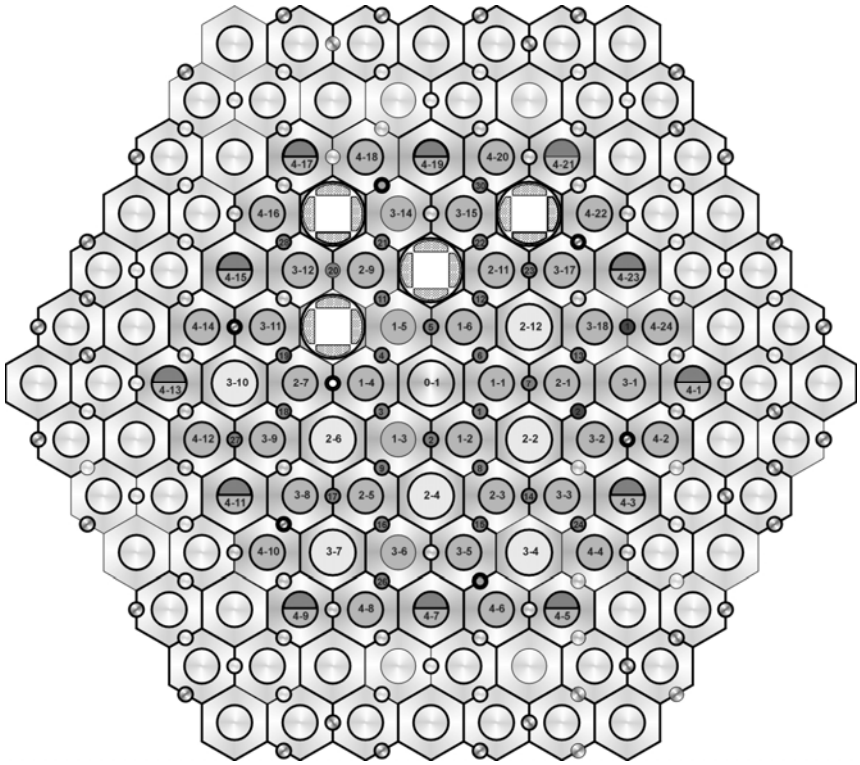

Fig. 5. Layout of the MIR core.

Table 1. The main test parameters and results of IRT-3M FE

Parameter	Plan	Testing results	
		199 MIS 38706	199 MIS 38606
The MIR reactor core experimental cell		3-16	2-10
Date of loading in the MIR reactor		18.03.2007	16.04.2007
Heat power, kW	≤ 750	515 ÷ 740	575 ÷ 800
Coolant temperature inlet/outlet, °C	≤ 60/73	≤ 60/64	≤ 60/65
Coolant flow rate, m3/h	50	≤ 63	≤ 63
Coolant velocity, m/s	5.8	≤ 7.3	≤ 7.3
Maximum power density in the fuel meat, kW/m3	$4.29 \cdot 10^6$	4.4910^6	$4.85 \cdot 10^6$
Maximum fission density rate, 10^{13} $cm^{-3}s^{-1}$: - in fuel meat, - in fuel particle	13.6 43.9	14.3 46.1	15.4 49.7
Maximum heat flux, kW/m2	950	995	1080
Maximum temperature, °C - other surface of cladding - fuel meat	≤ 101 ≤ 104	≤ 98 ≤ 102	≤ 101 ≤ 105
Average burn-up of ^{235}U at September 5,%		14.7	12.6

Testing of FE No.199MIS38706 is performed up to the average fuel burn-up of 14.7%. The maximal FE power made up 740 kW that was achieved at the average fuel burn-up of 11.6%. The calculated maximum local burn-up of ^{235}U achieved 21.6%.

Testing of FE No.199MIS38606 is performed up to the average fuel burn-up of 12.6%. The maximal FE power made up 800kW that was achieved at the average fuel burn-up of 8.9%. The calculated maximum local burn-up of ^{235}U achieved 18.5%.

Table2. The main test parameters and results of IRT-U FE

Parameter	Plan	Testing results	
		19 UI 0012006	19 UI 0022006
Number of the MIR reactor core sell		2-8	3-13
Date of loading in the MIR reactor		16.04.2007	16.04.2007
Duration on power testing, days		40	40
Heat power, kW:	≤ 650	440 ÷ 660	300 ÷ 450
Coolant temperature inlet/outlet, °C	60/78	60/65	60/64
Coolant flow rate, m^3/h	32	≤43	≤ 43
Coolant velocity, m/s	3,8	≤ 5,0	≤ 5,0
Maximum power density in the fuel meat, kW/m^3	$4.20 \cdot 10^6$	$4.27 \cdot 10^6$	$2.97 \cdot 10^6$
Maximum fission density rate, 10^{13} $cm^{-3}s^{-1}$: - in fuel meet, - in fuel particle	 15.9 42.6	 16.0 43.2	 11.2 30.0
Maximum heat flux, kW/m^2	≤ 930	≤ 915	≤ 635
Maximum temperature, °C - other surface of cladding, - fuel meat	 ≤ 102 ≤ 110	 ≤ 97 ≤ 106	 ≤ 85 ≤ 91
Burn-up of ^{235}U at September 5,%		9.3	6.1

Testing of FE No.19UI0012006 is performed up to the average burn-up of 9.3%. The maximal FE power made up 670 kW that was achieved at the average burn-up of 4.4%. The calculated maximum local burn-up of ^{235}U achieved 15.7%.

Testing of FE No.19UI0022006 is performed up to the average burn-up of 6.1%. The maximal FE power made up 515 kW that was achieved at the average burn-up of 4.5%. The calculated maximum local burn-up of ^{235}U achieved 10.3%.

Conclusion

Four prototype fuel elements for Uzbekistan WWR SM reactor (two of tube type design and two of pin type design) are being tested simultaneously in the MIR reactor since (March-April) 2007. The testing parameters are those typical for low and mean power pool reactors.

The testing is supposed to be carried out until U-235 burn up attains ~ 40% (first FE) and ~60% (second FE) in different FE types, correspondingly. The irradiation tests should be finished by ~April, 2008.

References

[1] V. Chernyshov, V. Aden, E. Kartashov, V. Lukichev, Russian RERTR Program Works Status, Proceedings of the 24th International Meeting on Reduced Enrichment for Research and Test Reactors, San Carlos de Bariloche, Argentina, November 3-8, 2002.

[2] Golosov, O.A. Semerikov, V.B. L'Outikova, et al. In-pile tests and post-reactor examinations of fuel elements with uranium-molybdenum fuel of reduced enrichment. International Topical Meeting on Research Reactor Fuel Management (RRFM 2004) Munich (Germany) 21-24 March 2004

[3] A.L. Izhutov, V.V. Alexandrov, V.A. Starkov et al. Results of pie pin type LEU U-Mo fuel elements tested in the MIR reactor. 28th International Meeting on Reduced Enrichment for Research and Testing Reactors", Cape Town, South Africa, October 29- November 2, 2006.

[4] MCU/RFFI/A program with library of constants DLC/MCUDAT-1.0. Qualification passport registration number 61 dated 17.10.96. An IAE preprint-6048/5, Russia scientific center "Kourchatov institute", Moscow, 1977.