CURRENT STATUS OF THE DEVELOPMENT OF HIGH DENSITY LEU FUEL FOR RUSSIAN RESEARCH REACTORS

A. Vatulin, I. Dobrikova, V. Suprun, Y. Trifonov
Federal State Unitary Enterprise
A.A.Bochvar All-Russian Scientific Research Institute of Inorganic Materials
(VNIINM)
123060 Rogov 5a, Moscow, Russia

and

E. Kartashev, V. Lukichev
Federal State Unitary Enterprise RDIPE
101000 P.O.Box 788, Moscow, Russia

ABSTRACT

One of the main directions of the Russian RERTR program is to develop U-Mo fuel and fuel elements/FA with this fuel. The development is carried out both for existing reactors, and for new advanced designs of reactors. Many organizations in Russia, i.e. "TVEL", RDIPE, RIAR, IRM, NPCC participate in the work.

Two fuels are under development: dispersion and monolithic U-Mo fuel, as well two types of FA to use the dispersion U-Mo fuel: with tubular type fuel elements and with pin type fuel elements.

The first stage of works was successfully completed. This stage included out-pile, in-pile and post irradiation examinations of U-Mo dispersion fuel in experimental tubular and pin fuel elements under parameters similar to operation conditions of Russian design pool-type research reactors.

The results received both in Russia and abroad enabled to go on to the next stage of development which includes irradiation tests both of full-scale IRT pin-type and tube-type fuel assemblies with U-Mo dispersion fuel and of mini-fuel elements with modified U-Mo dispersion fuel and monolithic fuel.

The paper gives a generalized review of the results of U-Mo fuel development accomplished by now.

1. Introduction

One of the main directions of the Russian RERTR program is to develop U-Mo fuel and fuel elements/FA on this fuel base. The development is carried out both for existing Russian-built research reactors, and for new advanced designs of reactors. Many organizations in Russia, i.e. "TVEL", RDIPE, RIAR, IRM, NPCC participate in the work.

Two types of FA are under development to use U-Mo fuel:
1) standard design with tubular type fuel elements;
2) novel design with pin type fuel elements.

The first stage of works was successfully completed. We mention briefly about the works, which this stage included:

1) Perform the irradiation test and post-irradiation examination of two full-scaled tubular fuel elements containing U-Mo dispersion fuel in the IVV-2M reactor at Zarechniy. The uranium

enrichment was 36%, and the uranium density was ~5.4 gU/cm^3. One assembly was irradiated to an LEU-equivalent average burnup of 40% and the other to an LEU-equivalent average burnup of 60%. The latest results of a neutron diffraction and small-angle neutron scattering study of the structure and the phase content of the fuel at different burnups will be presented in the separate paper at this meeting.

2) Perform the irradiation tests of pin type fuel mini-elements with U-Mo LEU dispersion fuel in the MIR reactor under parameters similar to operation conditions of Russian-built pool-type research reactors at that max temperature of the cladding was 115ºC and heat flux density was 900 kW/m^2. Totally, 71 pin-type fuel elements were tested including 12 types of fuel composition. The uranium density equaled to 4,0 and 6,0 g/cm^3. To obtain data on the fuel behavior at different burnups, several mini fuel element groups were irradiated up to different burnup values ranging from ~ 20% to ~ 70%. The obtained results of the post-irradiation examination of the fuel at different burnups will be presented in detail in the separate paper at this meeting. These results showed that in the view of swelling and irradiation stability of meat the reliable serviceability of fuel under operation conditions of Russian-built pool-type research reactors is beyond question. Only one fuel mini-element has failed at average burnup of ~ 63% because of technological defect undetected at fabrication stage. Based testing results the fabrication process have been corrected and also other cladding material has been used for the pin-type fuel elements.

3) Perform the lifetime tests of two full-scaled pin type FA with triangular grid in a hexahedral shroud in the WWR-M reactor at Gatchina under standard operation conditions of this reactor. One FA with LEU UO_2 dispersion fuel (uranium density ~ 2,7g/cm^3) was irradiated to average burnup of 60%, other FA with U-9%Mo dispersion fuel (uranium density ~ 5,3 g/cm^3) to average burnup of 32%. This testing was substantiated the availability of this pin-type FA design under standard operation conditions of pool-type reactors.

The results obtained both in Russia and abroad enabled to go on to the next stage of development which includes irradiation tests both of full-scale IRT pin-type and tube-type fuel assemblies with U-Mo dispersion fuel and of mini-fuel elements with modified U-Mo dispersion fuel and monolithic fuel.

2. Latest Main Results

By now the following results are available on these work directions.

To prepare of life-time tests of full-scaled IRT pin-type and tube-type fuel assemblies with LEU U-9%Mo dispersion fuel in the MIR reactor following large set of the calculated, designed and technologic investigations has been completed jointly by NPCC, RDIPE, VNIINM and RIAR.

1) The hydraulic-dynamic tests and the vibration tests of three full-scale pin type dummy FAs have been performed at VNIINM and at NPCC. Based on the obtained results the reliability of IRT-type FA design with pin-type fuel elements under operating and transportation condition has been substantiated.

2) The plan and procedure of irradiation testing for tube-type and pin-type fuel assemblies in MIR reactor has been developed. The irradiation parameters of FAs will provide the most heat operating conditions fuel assembly in WWR-SM (Uzbekistan) that is the highest

power density foreign reactor of the IRT type. Safety of testing fuel assemblies has been validated.

3) The design of experimental channels for testing IRT type fuel assemblies in the MIR reactor have been developed. Four experimental channels have been fabricated.

4) The quality control procedures and equipment for nondestructive control of pin-type fuel elements under industrial production conditions have been developed. The facility for nondestructive control of cladding thickness, fuel mass and uniformity of its distribution was fabricated. It simultaneously performs two independent methods of measurements: gamma-absorption and eddy-current control methods.

As a result of aforementioned activities four full-scaled IRT-type FAs (two six-tube FAs and two pin FAs) with U-9 %Mo dispersion fuel were fabricated at NPCC.

To fabricate fuel elements was used U-9%Mo alloy powder manufactured at PEI and at VNIINM. The powder was manufactured by centrifugal atomization and consists of spherical particles from 60 to 160 μm in sizes. Besides in one fuel element (4th fuel element from outside) of six-tube FA was used U-9%Mo alloy powder that was pre-oxidized under conditions recommended by PEI (the thickness of oxidized layer at the granule surfaces is < 1 μm).

The appearance of the granules used for the fabrication is illustrated in Fig. 1.

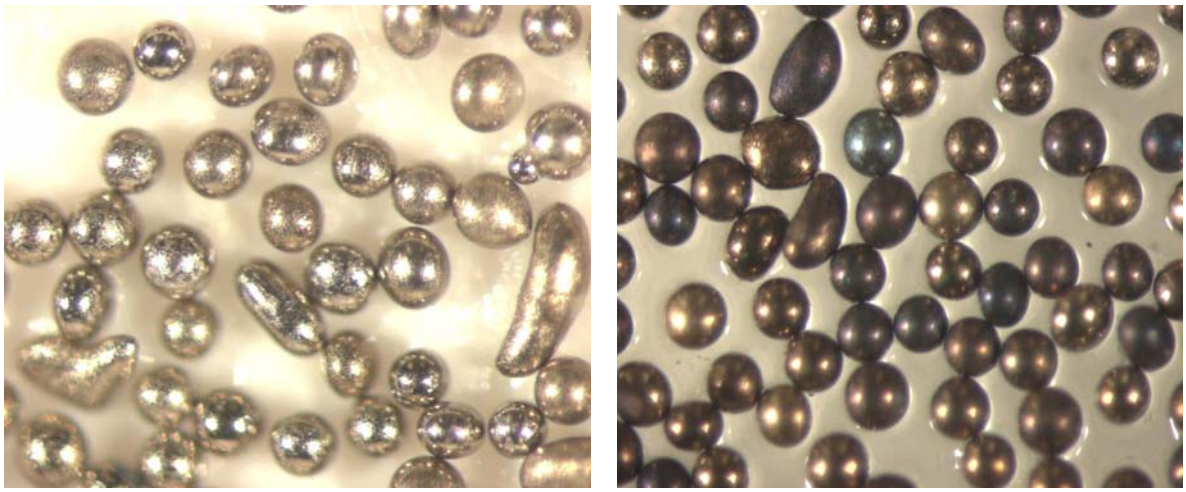

a) original granules b) oxidized granules

Figure 1

The cross-sections of experimental IRM-type FAs are presented in Fig.2 and Fig.3. The main characteristics of FAs are summarized in Table 1.

Table 1. The main characteristics of experimental IRT-type fuel assemblies

Parameter	Tube FA	Pin FA
Number of Fuel Elements (FE)	6	172
Cladding thickness, mm	0,45	0,4
Meat Length, mm	600	620
U^{235} mass per FA, g	351,6 ± 17,6	378,4 ± 17,2
U density, g/cm^3	5,4	6,0
Meat Material	U-9%Mo+Al	
Cladding material of FE	SAV-1	SAV-1, AMg2

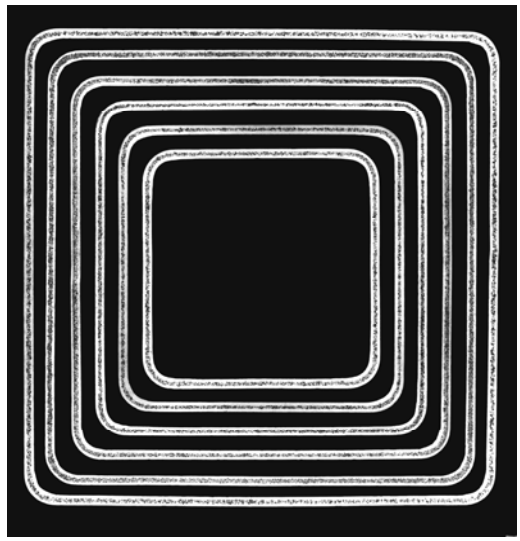

Figure 2. Cross-section of six-tube experimental FA with U-9% dispersion fuel

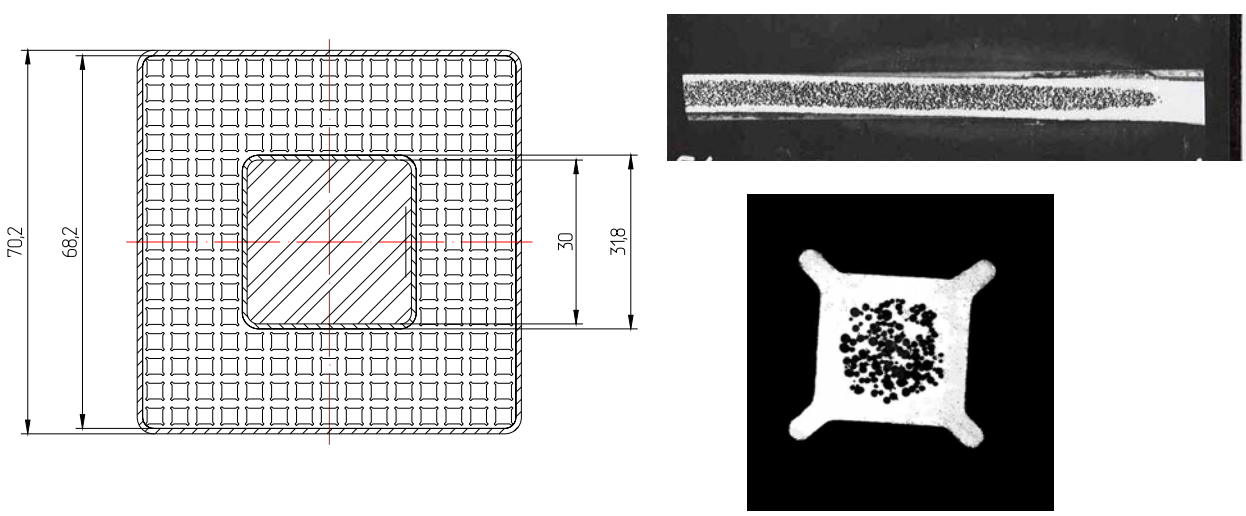

Figure 3. Cross-section of experimental pin FA and FE with U-9% dispersion fuel

The irradiation of two tube IRT-type assemblies with LEU U-9%Mo dispersion fuel in the MIR reactor began in March, 2007; the irradiation of two pin IRT-type assemblies – in April, 2007. The goal of tests is substantiation of serviceability for IRT-type fuel assemblies of tubular and pin design with disperse LEU fuel on the basis of U-9%Mo alloy intended for operation in WWR-SM reactor (Uzbekistan) which has highest power density.

The procedure of irradiation testing and first results will be presented in detail in the separate paper at this meeting.

The other direction of the our activity is the development the ways of improving (ensuring) the irradiation stability fuel on the basis of U-Mo alloy at high heat loads and burnups. The following works have been performed to be ready for irradiation tests in MIR reactor of both pin-type monolithic fuel mini-elements and modified dispersion fuel mini-elements on the basis of U-9%Mo alloy.

1) Two Lab-scale fabrication processes of U-Mo monolithic pin-type fuel elements both with zirconium and aluminum cladding have been developed and tested. Fuel mini-element is a pin of square cross-section with spacing fins. Fins are screw twisted. The meat and cladding co-extrusion is used for manufacturing of fuel elements with monolithic U-Mo meat and Zr cladding. An attempt to fabricate fuel element with Al cladding both by co-extrusion and by extrusion of cladding on the finished meat as a wire was not successful. The reason was a significant difference in mechanical properties. The separate fabrication of both fuel meat and cladding of needed size has been developed. Aluminum cladding is fabricated by extrusion of an aluminum bushing through the mould die of an appropriate shape (to form fins) with a needle. Thus the cladding as a tube with spiral fins has a central hole. An even joining of a cladding with a meat is obtained due to the uniform upset of a former over a meat by the process of rolling using special rolling head equipped with 4 rollers.
By now the experimental fuel mini-elements for irradiation test are being fabricated using those fabrication processes.

2) Several types of modified U-9%Mo dispersion fuel have been proposed and developed on the basis of analyses of Russian and foreign researches. For irradiation tests 48 pin-type mini-fuel elements with modified dispersion fuel with the uranium density equaled to 6,0 g/cm^3 have been manufactured.

The designs of fuel mini-elements are shown in Fig.4. The parameters of fuel mini-elements are given in Table 2 and Table 3. The types of fuel mini-elements with modified U-9%Mo dispersion fuel are given in Table 4.

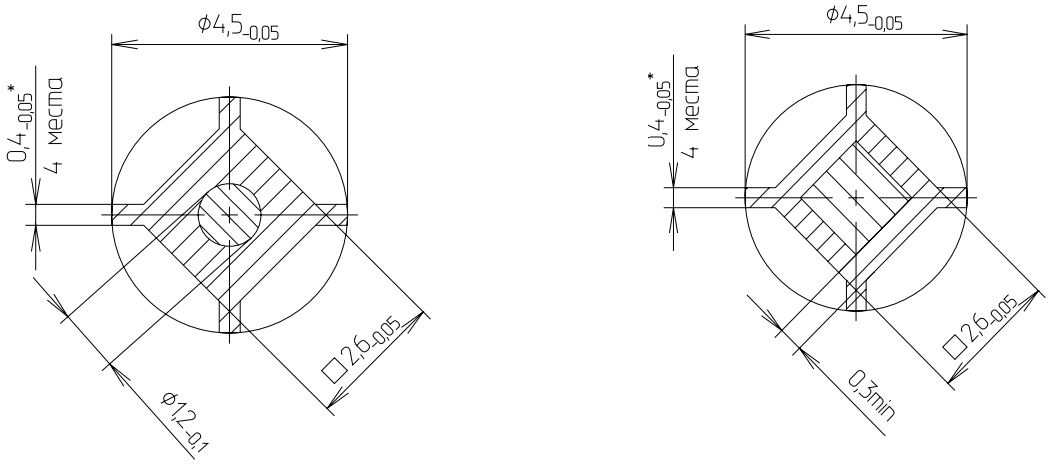

a) fuel mini-element with monolithic U-9%Mo meat and Zr or Al cladding

b) fuel mini-element with modified dispersion U-9%Mo fuel and Al cladding

Figure 4. The designs of fuel mini-elements

Table 2. Geometrical characteristics parameters of fuel mini-elements

Parameter	FE type	
	monolithic	dispersion
Overall length, mm	250	
The length of meat, mm	200_{-20}	
Circumscribed diameter, mm	$4{,}5_{-0{,}05}$	
The length of the square side, mm	$2{,}60_{-0{,}03}$	
Diameter of monolithic meat, mm	$1{,}2_{-0{,}1}$	
The thickness of cladding, mm	from 0,6 to 0,7	0,3 min
The width of a fin, mm	0,4±0,1	
The pitch of twisting, mm	320 ±20	

Table 3. Materials of fuel mini-elements

Parameter	Type of Mini-element		
	monolithic		dispersion
Material of cladding	Zr alloy 110	Al alloys (SAV-6 and 99)	Al alloy (SAV-6 and 99)
Material of meat	U-9%Mo		U-9%Mo+ Al powders PA3/PA4
U_{235} loading, g	0,69±0,1		0,57±0,1
Enrichment on U_{235}, %	19,7±0,3%		
The size of fuel granules, mcm			60-160

Table 4. Types of modified U-9%Mo dispersion fuel

№ of variant	Characteristics of FE meat		Cladding Material
	Phase state of fuel granules (U-9%Mo alloy)	Matrix Material	
1	Single phase	PA-4	SAV-6
2	Single phase	PA-4	99
3	Single phase	Al alloy+2%Si	SAV-6
4	Single phase	Al alloy+2%Si	99
5	Single phase	Al alloy+5%Si	SAV-6
6	Single phase	Al alloy+5%Si	99
7	Single phase	Al alloy+13%Si	SAV-6
8	Single phase	Al alloy+13%Si	99
9	Two-phase	PA-4	SAV-6
10	Two-phase	PA-4	99
11	Fuel granules with ZrN coating	PA-4	SAV-6
12	Fuel granules with ZrN coating	PA-4	99
13	Oxidized fuel granules	PA-4	SAV-6
14	Oxidized fuel granules	PA-4	99

The irradiation of two capsules, each containing 36 mini-fuel elements are planned to begin at the end of this year in the MIR reactor. The planned testing parameters are tabulated in Table 5.

Table 5. The parameters of fuel mini-element test

Parameter	Value
Input Coolant pressure, MPa	1.1 – 1.3
Input Coolant temperature at the WC inlet, ^{o}C	50 – 70
Coolant rate, m/s	≤ 5
Maximum fuel temperature of mini fuel elements, ^{o}C	200 – 300
Coolant surface boiling	Not allowed

3. Program of further works

The further works are planned to conduct in two main directions:

I. The lifetime tests of four full-scaled IRT-type FAs (two six-tube FAs and two pin FAs) with U-9 %Mo dispersion fuel in the MIR. Finishing of these tests and the beginning of the first PIE (post-irradiation experiment) is expected at the end of 2008.

II. The irradiation tests of modified dispersion and monolithic fuels on the U-9%Mo basis in the MIR reactor. Finishing of these tests is expected at the end of 2008. The first PIE (post-irradiation experiment) is expected to begin the middle of 2009.

Acknowledgements

The authors would like to express their appreciation to the TVEL corporation, RDIPE, RIAR and the staff of Novosibirsk plant for their significant contribution in development of fabrication process of IRT-type tube and pin fuel assemblies, and also ANL (USA) for their support, helpful collaboration and assistance in these works.

References

[1] M.I.Solonin, A.V.Vatulin, Y.A.Stetsky, I.V.Dobrikova (VNIINM) and A.V.Ivanov, A.A.Kruglov, E.G.Leonov (Machine-Building Plant, Electrostal). Development of the new generation of fuel elements and fuel assemblies for research reactors. 12^{ve} Int. Mtg. "Research Reactors: Science and High Technologies", Dimitrovgrad, Russia, 2001.

[2] M.I.Solonin, A.V.Vatulin, Y.A.Stetsky, V.B.Suprun, Y.I.Trifonov, I.V.Dobrikova (VNIINM) and V.A.Starkov, V.V.Pimenov, N.G.Gataullin, Y.B.Chertkov, V.E.Fedoseev (NIIAR, Dimitrovgrad). Substantiation of in-pile tests of high density fuel. 12^{ve} Int. Mtg. "Research Reactors: Science and High Technologies", Dimitrovgrad, Russia, 2001.

[3] A.Vatulin, Y. Stetsky, V. Mishunin, V. Suprun, I. Dobrikova (VNIINM). Progress of the Russian RERTR Program: Development of New-Type fuel elements for Russian-built Research Reactors. 6th Int. Mtg. RRFM'2002, Ghent, Belgium, March 2002.

[4] A.Vatulin, Y.Stetsky, V.Suprun, Y.Trifonov, V. Mishunin, V. Sorokin (VNIINM). Russian RERTR Program: Advanced LEU fuel development for research reactors. 24th Int. Mtg. RERTR'2002, Bariloche, Argentina, November 2002.

[5] V.A.Starkov, V.V.Pimenov, N.G.Gataullin, Y.B.Chertkov, V.E.Fedoseev (NIIAR, Dimitrovgrad) and A.V.Vatulin, I.V.Dobrikova. G.V.Kulakov (VNIINM). Substantiation of the conditions of in-pile tests of LEU high density fuel for research reactors. 7th Int. Mtg. RRFM'2003, Aix-en-Provence, France, March 2003.

[6] A.Vatulin, A. Morozov, Y.Stetsky, I.Dobrikova. V.Suprun, Y.Trifonov, V. Mishunin, V. Sorokin (VNIINM). Major results on the development of HIGH DENSiTY U-Mo FUEL and pin-type fuel elements Executed under the Russian RERTR program and in cooperation with ANL (USA). 25th Int. Mtg. RERTR'2003, Chicago, USA, October 2003.

[7] A.Vatulin, A. Morozov, I.Dobrikova. V.Suprun, V. Mishunin, Development of Irt-type fuel assembly with pin-type fuel elements for LEU conversion of WWR-SM research reactor in Uzbekistan. 25th Int.Mtg. RERTR'2003, Chicago, USA, October 2003.

[8] A.Vatulin, A. Morozov, I.Dobrikova. V.Suprun, V. Mishunin, Development of Irt-type fuel assembly with pin-type fuel elements for LEU conversion of WWR-SM research reactor in Uzbekistan. 8th Int. Mtg. RRFM'2004, Munich, Germany, March 2004.

[9] A.Vatulin, I.Dobrikova, Y.Petrov, V. Suprun, Y.Trifonov. Results of PIE of experimental (U-Mo)-based LEU disperse fuel compositions. 8-th Meeting, Dimitrovgrad, 2007.