DESIGN STUDY FOR A LOW ENRICHED URANIUM CORE FOR THE HIGH FLUX ISOTOPE REACTOR

R. T. Primm, III, R. J. Ellis, J. C. Gehin, and D. L. Moses
Oak Ridge National Laboratory
One Bethel Valley Road
Oak Ridge, Tennessee 37831-6399 – USA

ABSTRACT

Neutronics and thermal hydraulics studies for the High Flux Isotope Reactor (HFIR) show that low-enriched uranium (LEU) fuel elements can operate at equivalent power (85 megawatts–thermal) and core lifetime (26 days) as the current highly enriched uranium fuel elements. The low-enriched uranium (LEU) fuel is a metal alloy; uranium-10 weight percent molybdenum (U-10Mo) metal foil with radially "continuously graded" fuel meat thickness. However, the LEU fuel design results in a 15 percent reduction in peak thermal neutron flux in the beryllium reflector of the HFIR compared to the current HEU fuel. The LEU HFIR core weighs 30% more than the HEU core. A minimum U-10Mo foil thickness of 83.8 microns (3.3 mils) is required to compensate for power peaking in the LEU core although this value could be increased significantly without much penalty. The maximum U-10Mo foil thickness in the graded design is 457 microns (18 mils). For LEU dispersion fuel, the operating power for HFIR would be reduced considerably below 85 MW_{th} due to thermal considerations for an equivalent 26-day cycle.

1. Introduction

This paper contains the results of a preliminary engineering design study requested and funded by the U.S. Department of Energy/National Nuclear Security Administration (DOE/NNSA), through the Reduced Enrichment for Research and Test Reactors (RERTR) Program. The purpose of the study is to evaluate the use of low enriched uranium (LEU, <20% enriched) as a fuel for the High Flux Isotope Reactor (HFIR). The engineering design study is consistent with a defined set of assumptions and criteria specified by Oak Ridge National Laboratory (ORNL) staff with concurrence from the RERTR Program before the study began [1].

The list of neutronic and thermal-hydraulic design parameters addressed in the study and discussed in this paper is given in Table 1. While these results are considered preliminary, the computer programs and data libraries used are the certified versions used in routine safety analysis studies at HFIR and are the versions that are the computational basis for recent updates to the reactor physics and thermal-hydraulics sections of the Updated Safety Analysis Report for HFIR. Likewise, the reactor models that are the starting point for the LEU design studies are the certified versions used for safety analyses of HFIR. The studies focus on finding an LEU design that would safely maintain the current operating power (85 Megawatts–thermal, MWth) and core lifetime (26 days).

2. Description of HFIR

The HFIR (Fig.1) is a pressurized, light-water-cooled and -moderated, flux-trap-type reactor that uses fuel highly-enriched in ^{235}U (93 wt. %) and is currently operating at 85 MWth. The reactor core (Fig. 2) consists of two annular fuel elements, each approximately 61-cm high (fueled

height is 51 cm). At the center of the core is a 12.70-cm-diam cylindrical hole, referred to as the "flux trap target" region, which contains 37 vertical experimental target sites.

Table 1: Quantities analyzed in the HFIR LEU study

Safety parameters

- Doppler reactivity coefficient
- Void reactivity coefficient
- Control element differential reactivity worth
- Central void maximum reactivity worth
- Fuel element criticality (elements together and separate in light water and reflected by concrete)
- Fuel element decay heat

Performance parameters

- Cycle length
- Power distribution
- Neutron flux in the central target region
- Peak unperturbed thermal flux in the reflector
- Thermal neutron flux at the HB-2 beam tube
- Thermal neutron flux at the NAA irradiation locations
- Cold source neutron flux

Other parameters (safeguards and environmental)

- Plutonium content in spent fuel elements
- Fuel element dose rates
- Fuel element isotopic compositions

The HFIR fuel elements, surrounding the flux trap, contain vertical, curved plates extending in the radial direction. The fuel elements are separated by a narrow water gap. The inner element contains 171 involute-shape fuel plates, and the outer element contains 369 involute-shape fuel plates, as detailed in Fig. 3. The fuel plates are a sandwich-type construction with a fuel-bearing cermet and aluminum filler bonded to a cladding of type-6061 aluminum. The HEU oxide (U_3O_8) is distributed (graded) along the arc of the involute aluminum plate, as seen schematically in Fig. 3.

Control plates, in the form of two thin, europium/tantalum-bearing concentric cylinders, are located in an annular region between the outer fuel element and the beryllium reflector (see Fig. 1). These plates are driven in opposite directions. Reactivity is increased by downward motion of the inner cylinder, which is used only for shimming and regulation. The outer control cylinder – termed safety plates - consists of four separate quadrants, each having an independent drive and safety release mechanism. Reactivity is increased as the outer plates are raised.

Figure 1: The basic layout schematic of HFIR core and reflector.

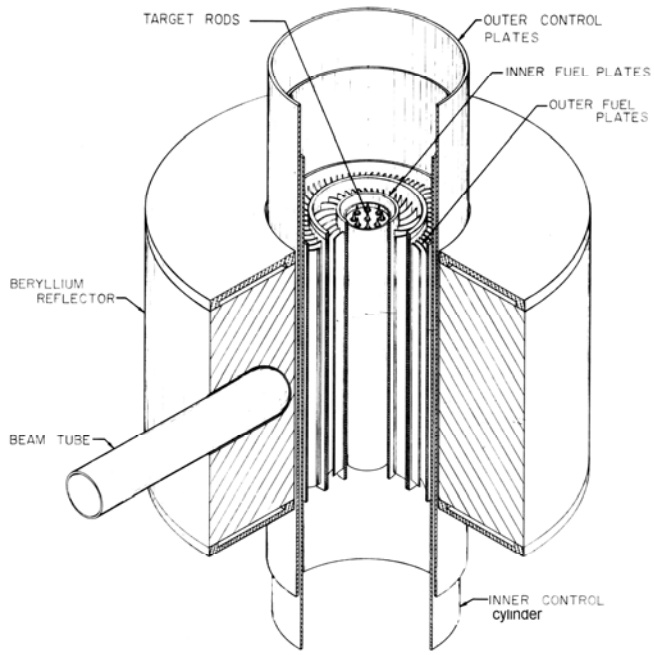

Figure 2: The core of HFIR, showing the inner (IFE) and outer (OFE) fuel elements.

Figure 3: Schematic of radial fuel grading in the current HEU fuel plates in the HFIR fuel elements.

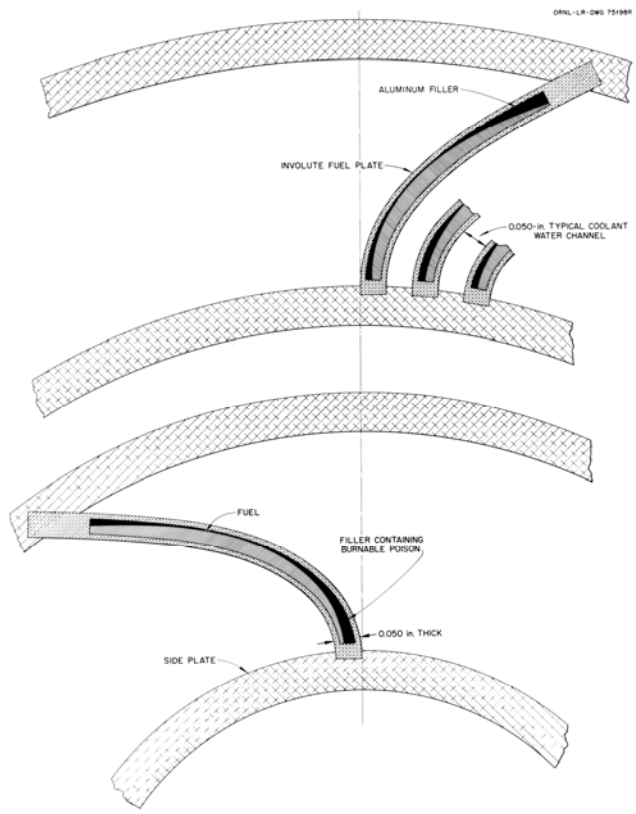

The control plates and fuel elements are surrounded by a concentric ring of beryllium that serves as a reflector and is approximately 30-cm thick. This Be reflector is subdivided into three regions: the inner removable reflector, the middle semi-permanent reflector, and then the outer permanent reflector. The beryllium is surrounded by a light water reflector. In the axial direction, the reactor is reflected by light water.

3. Description of the HFIR LEU Study

The analyses and results of the HFIR LEU study have been or are being reported in several venues [2, 3, 4]. For the HFIR LEU neutronic analyses, the current uranium form, U_3O_8, is replaced by U-10Mo at 19.75% ^{235}U enrichment. Neutronics analyses were conducted for two variants of LEU fuel – dispersions of U-10Mo particles in silicon-stabilized aluminum powders and discrete, U-10Mo radially-graded foils inside aluminum cad (monolithic fuel form). For this paper, the results are shown only for monolithic U-10Mo fuel in the plates since the dispersion fuel designs studied could not attain the required 85 MW_{th} power for the specified cycle length.

The neutronic performance of HFIR with LEU fuel was analyzed using the standard set of computational tools that are currently used at ORNL to support the operation of the reactor. These tools include those for neutronics, thermal-hydraulics, and dose assessments. The methods and computer codes are an extension of the experience base at ORNL developed for the conceptual core design for the Advanced Neutron Source (ANS) project. The computer codes used for these analyses included MCNP5 [5], SCALE 5 [6], AMPX [7], and BOLD VENTURE

[8] for reactor physics calculations and assessments. The nuclear data libraries used with the neutronics codes were based on ENDF/B-V and VI nuclear data. Twenty energy groups were used in the VENTURE core diffusion/depletion calculations. The MCNP studies used ENDF/B-VI continuous energy libraries. Diffusion theory calculations were found to be adequate for predicting required core loading to achieve cycle length and for estimating end-of-life nuclide inventories. Monte Carlo calculations were required for accurate prediction of local power densities at the radial and axial edges of the reactor core.

The thermal-hydraulic performance of HFIR with LEU fuel was analyzed using the computer program documented in [9]. This is a two-dimensional (across the width and down the length) model of a single channel in the IFE and a single channel in the OFE. Power densities from the reactor physics calculation as a function of time during fuel cycle are assigned to the grid points of the mesh. Other input to the program include plant operating conditions (inlet temperature, pressure, core pressure drop) and fraction of fission heat deposited outside the fuel plates. The program includes correlations to calculate the aluminum oxide buildup on the fuel plates as a function of time and position, pressure loss as coolant flows along the channel, fuel plate deflections induced by differential pressures and temperature (narrowing of coolant channels), allowance for lack of heat conduction due to lack of bonding of fuel to clad, determination of value of heat transfer coefficients for clad and oxide, and allowance for radiation induced swelling of clad (narrowing of coolant channels). Uncertainties in both fuel plate as-fabricated dimensions and previously-mentioned correlations are accounted by the use of uncertainty factors. The operating power for HFIR is the reactor power that corresponds to the incipient boiling limit with all fuel fabrication parameters (dimensions, fuel thickness variation, etc.) and reactor instrumentation (pressure sensors, flow rate, inlet temperatures, etc.) at the limit of their allowable ranges (tolerance limits) and at the values that would be most favorable to the onset of boiling. It is noteworthy that due to the small thickness of the HFIR coolant channels, the incipient boiling heat flux is only slightly lower than the burnout heat flux. HEU tolerances for the current oxide/Al fuel were assumed for the LEU analyses.

The approach followed to determine the appropriate LEU fuel loading and fuel grading profile is as follows:

1. An initial fuel loading profile and uranium mass is assumed (starting with a uniform profile, for example).
2. A fuel cycle calculation is performed with BOLD VENTURE to obtain the cycle length and power distribution.
3. If the fuel cycle length criterion is not met, the overall fuel loading will be increased (but will not exceed the maximum local loading determined by the existing plate geometric design).
4. The relative loading of fuel in each local region is adjusted to minimize variation among local power densities.
5. Steps 2 through 4 are repeated as necessary for a number of iterations resulting in the best grading profile for the fuel being considered.
6. With the final fuel loading and grading determined, MCNP calculations of the beginning of cycle LEU fresh core are performed to obtain the power density distribution and are used to adjust the power densities obtained from BOLD VENTURE calculations.

7. Thermal-hydraulic analysis with MCNP-derived local power densities (for beginning-of-life) and BOLD VENTURE (for depletion steps) is performed to determine the maximum reactor operating power to stay within the required thermal and safety margins.

4. Results of the Analyses

Two LEU options for fuel grading were established – a constrained minimum fuel meat thickness of 127 microns (5 mils) and an unconstrained minimum thickness. Analyses revealed that there was little difference in axial and radial fuel edge power peaking for these two options. The results for the unconstrained fuel grading are tabulated in Table 2, illustrated in Figs. 4 and 5, and compared to the current HEU grading profile. The higher ^{235}U density for LEU, relative to HEU, results in considerably thinner fuel meat thicknesses for the LEU plates. This fuel grading allows HFIR to operate on LEU at 85 MW_{th} for 26 days thus matching the operating power and cycle length of the current HEU core. Important performance parameters for the reactor are the thermal (< 0.625 eV) neutron flux levels at locations corresponding to key experimental facilities in the central flux trap target region and in beryllium reflector. For comparison purposes, unperturbed values representing the maximum achievable thermal fluxes that can be obtained are used. These unperturbed thermal neutron flux values are provided in Table 3 for a power level of 85 MW for the LEU and HEU core designs at beginning and end-of-cycle. Note that HB2 refers to the location of the tip of the HB2 beam tube and ISVXF-7 and EF3 refer to the two pneumatic tubes that are neutron activation positions in the outer Be reflector. The cold neutron source location is the most significant of the performance parameters due to current and future neutron-scattering missions of HFIR. The reduction in thermal neutron flux, about 15%, is greatest in this location.

Table 2: Comparison of fuel meat thicknesses for LEU (unconstrained minimum thickness) and HEU fuel plates

Distance along inner element plate (cm)	Thickness of fuel meat LEU (μm)	LEU (mils)	HEU (μm)	HEU (mils)	Distance along outer element plate (cm)	Thickness of fuel meat LEU (μm)	LEU (mils)	HEU (μm)	HEU (mils)
0.252	84	3.3	259	10.2	0.191	152	6.0	389	15.3
0.448	91	3.6	295	11.6	0.216	170	6.7	396	15.6
1.203	99	3.9	394	15.5	0.395	262	10.3	429	16.9
2.439	165	6.5	521	20.5	1.134	378	14.9	584	23.0
3.811	213	8.4	620	24.4	2.256	455	17.9	688	27.1
5.314	224	8.8	625	24.6	3.449	437	17.2	648	25.5
6.969	185	7.3	546	21.5	4.655	320	12.6	526	20.7
7.985	140	5.5	472	18.6	5.908	203	8.0	373	14.7
8.091	137	5.4	465	18.3	6.731	170	6.7	292	11.5

Figure 4: HFIR IFE fuel profile

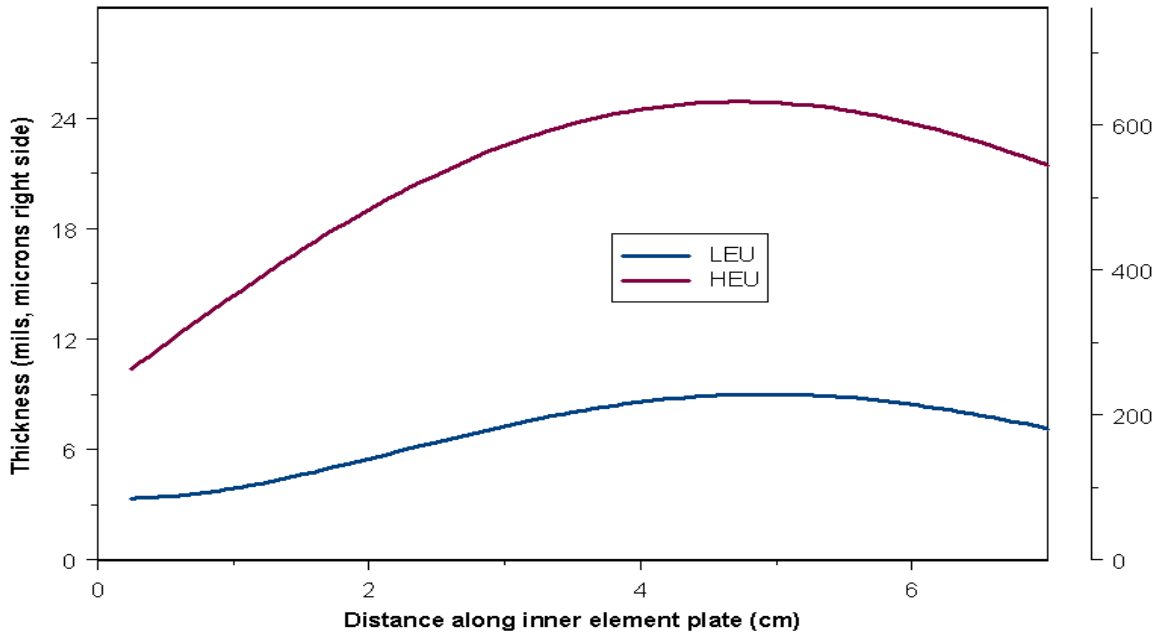

Figure 5: HFIR OFE fuel profile

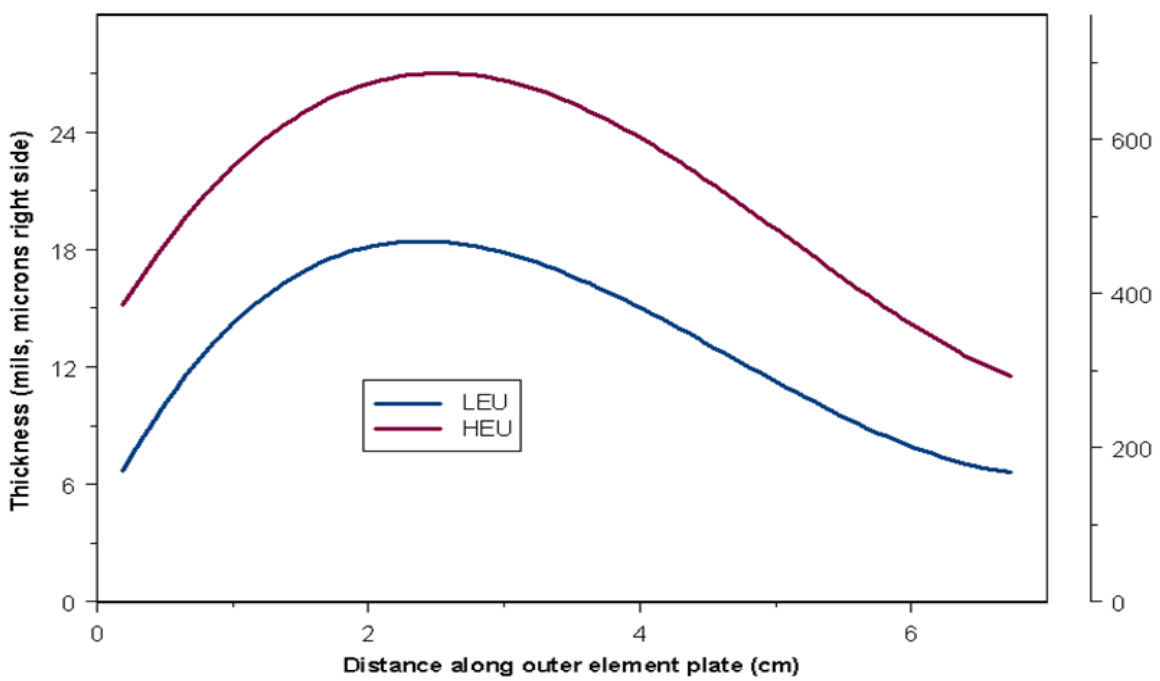

Table 3: Unpertrubed thermal neutron flux level ($cm^{-2} \cdot s^{-1}$) at key locations

Thermal Neutron Flux	LEU		HEU		% Difference	
	BOL	EOL	BOL	EOL	BOL	EOL
Central target	$2.5 \times 10^{+15}$	$2.5 \times 10^{+15}$	$2.6 \times 10^{+15}$	$2.7 \times 10^{+15}$	–4.7	–8.0
Peak in beryllium (cold neutron source)	$1.1 \times 10^{+15}$	$1.5 \times 10^{+15}$	$1.1 \times 10^{+15}$	$1.7 \times 10^{+15}$	–3.5	–15
HB2 Beam Tube	$9.6 \times 10^{+14}$	$1.3 \times 10^{+15}$	$1.0 \times 10^{+15}$	$1.4 \times 10^{+15}$	–3.9	–11
ISVXF-7 Activation Facility	$8.1 \times 10^{+14}$	$1.1 \times 10^{+15}$	$8.4 \times 10^{+14}$	$1.2 \times 10^{+15}$	–4.2	–11
EF3 Activition Facility	$3.2 \times 10^{+14}$	$4.1 \times 10^{+14}$	$3.4 \times 10^{+14}$	$4.6 \times 10^{+14}$	–5.0	–10

Key safety parameters have also been calculated as reported in detail in [4]. Comparisons of LEU core decay heat values and Doppler and void reactivity coefficients to those for the HEU core are provided in Tables 4 and 5. In general these parameters indicate no significant differences between the LEU core and the HEU core. Not shown but illustrated in [4] are the axial power peaks, especially at the base of the fuel plate (coolant exit) that are driving factors in limiting the operating power for the LEU cycle. Because the ^{235}U loading in the LEU core is twice that of the HEU core to achieve the same cycle length, the LEU cores studied cannot achieve lower local axial power densities than the HEU core. With one-dimensional grading in the radial direction only, the average ^{235}U density along the lower edge of the core will always be approximately twice the value of the HEU core. The neutron flux in that region will be relatively insensitive to the ^{238}U content because it will always be well-thermalized due to the presence of water below the fuelled region of the core. As a result of these two factors the local power density along the lower edge of the LEU cores studied will be higher than the maximum local power density along the lower edge of the HEU core.

Table 4: Decay heat (W) for the HFIR HEU and LEU cores

Decay heat		Discharge	0.5 year	1 year	5 years	30 years
HEU	Actinides	$4.1 \times 10^{+3}$	3.9×10^{-1}	3.9×10^{-1}	3.8×10^{-1}	3.4×10^{-1}
	FP	$4.4 \times 10^{+6}$	$4.6 \times 10^{+3}$	$1.4 \times 10^{+3}$	$1.1 \times 10^{+2}$	$4.2 \times 10^{+1}$
	Total	$4.4 \times 10^{+6}$	$4.6 \times 10^{+3}$	$1.4 \times 10^{+3}$	$1.1 \times 10^{+2}$	$4.2 \times 10^{+1}$
LEU	Actinides	$7.9 \times 10^{+4}$	$1.2 \times 10^{+0}$	$1.2 \times 10^{+0}$	$1.2 \times 10^{+0}$	$1.3 \times 10^{+0}$
	FP	$5.0 \times 10^{+6}$	$4.6 \times 10^{+3}$	$1.4 \times 10^{+3}$	$1.1 \times 10^{+2}$	$4.1 \times 10^{+1}$
	Total	$5.1 \times 10^{+6}$	$4.6 \times 10^{+3}$	$1.4 \times 10^{+3}$	$1.1 \times 10^{+2}$	$4.3 \times 10^{+1}$

Using recent HFIR operating experience and the expertise of HFIR management and staff, a preliminary cost estimate has been made for the required upgrades at the HFIR site to accommodate the use of LEU within the DOE authorization-basis regulatory system. Required upgrades include such items as new handling tools for the heavier core, on-site storage of LEU fresh cores, physics and structural testing of the LEU core, and associated revisions to environmental and safety analyses and operating procedures. This preliminary cost estimate is approximately $140 million with all work completed by the end of fiscal year 2014. This total does not include the costs of new fuel fabrication facilities and of fuel development and qualification, but does include inflation factors and contingencies to compensate for uncertainties in the estimates.

Table 5: Doppler and void reactivity coefficients

Reactivity Coefficient	LEU		HEU	
	BOL	EOL	BOL	EOL
Doppler Coefficient (% Δk/k / °C)	-2.4×10^{-5}	-2.4×10^{-5}	-2.4×10^{-6}	-2.5×10^{-6}
Void Coefficient (% Δk/k / %void)				
Outer element	–0.079	–0.068	–0.076	–0.056
Inner element	–0.16	–0.14	–0.19	–0.14
Central flux trap	+0.021	+0.027	+0.026	+0.032

5. Conclusions and Directions for Future Studies

Based on the results reported in this paper, a new core design has been obtained for HFIR utilizing LEU in the form of U-10Mo alloy in a monolithic fuel form. The limiting requirement of grading the fuel (varying thickness) in only one direction (radial) makes it challenging to obtain acceptable power densities and peak temperatures at the coolant exit from the core. From a neutronics viewpoint, the use of an LEU core in HFIR is predicted to result in a 9% reduction in the peak thermal neutron flux level in the central flux trap target region and about a 15% reduction in the peak thermal neutron flux level in the outer beryllium (Be) reflector region where the HFIR cold source is located. The lifetime of the LEU core attained the 26 day target with approximately 17.9 kg of ^{235}U in the core, which is about a factor of 1.9 more than the current ^{235}U loading of the high enriched uranium (HEU) core used in HFIR.

Given that LEU designs have been found that permit operation of HFIR at the currently authorized power of 85 MW_{th} and maintain the existing cycle length, the 15% penalty in neutron flux to the cold source is an inherent property of LEU fuel. The Executive Director of HFIR has reviewed the LEU studies presented in this paper and concluded, "We cannot afford to compromise on reactor performance - what we have in flux we need. … Our current studies are inconclusive but we do believe that a technology breakthrough will be required (to prevent performance degradation)."

Since the 15% loss of thermal neutron flux to the cold source is unacceptable to HFIR's Executive Director, further study is needed to find ways to recapture the loss of flux while maintaining the safety margins during HFIR operations. One approach to regaining lost thermal flux is to study the ability to return HFIR to safe operation at or about 100 MW_{th}. HFIR was designed to operate at 100 MW_{th} and recent studies have shown that it would be possible to return to that value with HEU fuel without changing the current system pressure [10]. Increasing operating power could be achieved by 1) reducing engineering uncertainty in fuel fabrication so that higher operating power at the same margin of safety can be obtained, 2) improving physics/thermal hydraulic safety analysis methods resulting in better estimates of the safety margins, and/or 3) developing a new fuel fabrication technology that would permit fuel grading in the axial and radial directions.

Future reactor analysis effort will be organized to provide further studies of the one-

dimensionally graded profiles (radial), studies of two-dimensionally graded profiles (radially and axially), and development and refinement in analysis methodologies that will reduce conservatism in both one- and two-dimensional methodologies (such as statistical evaluation of fabrication uncertainties as performed at DOE's Advanced Test Reactor in Idaho and a more realistic evaluation of the coolant hot streak based on mixing due to highly turbulent flow). As noted in the Introduction, the analyses in [4] included a cost estimate for LEU conversion at HFIR of greater than $100 million; however, this estimate is based on expert elicitation with inflation factors and contingencies and greater accuracy could be obtained with more detailed engineering cost analyses. Finally, it appears that achieving an increased authorized operating power for HFIR may require a technology breakthrough in fabrication for the graded fuel meat thickness for the involute-shape plates used in HFIR.

6. References

[1] R. T. Primm, III, R. J. Ellis, J. C. Gehin, D. L. Moses, J. L. Binder and N. Xoubi, *Assumptions and Criteria for Performing a Feasibility Study of the Conversion of the High Flux Isotope Reactor Core to Use Low-Enriched Uranium Fuel*, ORNL/TM-2005/269, February 2006.

[2] R. T. Primm, III, R. J. Ellis, J. C. Gehin, D. L. Moses, J. L. Binder, and N. Xoubi, *Assumptions and Criteria for Performing a Feasibility Study of the Conversion of the High Flux Isotope Reactor Core to Use Low-Enriched Uranium Fuel*, Proceedings of the PHYSOR 2006 Conference, September 2006.

[3] R. J. Ellis, J. C. Gehin, and R. T. Primm, III, *Cross Section Generation and Physics Modeling in a Feasibility Study of the Conversion of the High Flux Isotope Reactor Core to Use Low-Enriched Uranium Fuel*, Proceedings of the PHYSOR 2006 Conference, September 2006.

[4] R. T. Primm, III, R. J. Ellis, J. C. Gehin, K. T. Clarno, K. A. Williams, and D. L. Moses, *Design Study for a Low Enriched Uranium Core for the High Flux Isotope Reactor, Annual Report for FY 2006*, ORNL/TM-2006/136, Oak Ridge National Laboratory, October 2006.

[5] *MCNP—A General Monte Carlo N-Particle Transport Code*, Version 5, LA-CP-03-0245, Los Alamos National Laboratory, April 2003.

[6] *SCALE: A modular code system for performing standardized computer analyses for licensing evaluations*, ORNL/TM-2005/39, Version 5, Vols. I–III, Oak Ridge National Laboratory, April 2005.

[7] N. M. Greene et al., *AMPX—A modular code system to generate coupled multigroup neutron-gamma cross sections from ENDF/B*, ORNL/TM-3706, ORNL, March 1976.

[8] D. R. Vondy, T. B. Fowler, and G. W. Cunningham III, *The Bold Venture computation system for nuclear reactor core analysis, Version III*, ORNL-5711, Oak Ridge National Laboratory, June 1981.

[9] Howard A. McLain, *HFIR Fuel Element Steady State Heat Transfer Analysis, Revised Version,* ORNL/TM-1904, Oak Ridge National Laboratory, December 1967 as appended by T. E. Cole, L. F. Parsly, and W. E. Thomas, *Revisions to the HFIR Steady State Heat Transfer Analysis Code*, ORNL/CF-85/68, Oak Ridge National Laboratory, April 7, 1986.

[10] R. B. Rothrock, *Thermal-Hydraulic Bases for the Safety Limits and Limiting Safety System Settings for HFIR Operation at 100 MW and 468 psig Primary Pressure, Using Specially Selected Fuel Elements*, ORNL/TM-13694, September 1998.