Production of Fission Mo-99 by LEU Irradiation
Status of the Chilean Project

Jorge Medel, Jorge Marín and Rosemarie Schrader
Chilean Nuclear Energy Commission (CCHEN)
Amunátegui 95, Santiago - Chile

ABSTRACT

Since 1975, the Chilean Nuclear Energy Commission (CCHEN) is producing in its nuclear reactor RECH-1 radioisotopes as ^{99m}Tc, ^{131}I, ^{192}Ir, ^{153}Sm and others. For the last two years CCHEN has been producing Mo-Tc generators using Canadian fission ^{99}Mo. The challenge is now the indigenous fission ^{99}Mo production from LEU foils, thanks to an IAEA CRP supported by ANL, USA.

CCHEN has the infrastructure and qualified personnel required, who is now working in the different steps of the project that are: neutronic, thermal-hydraulic and dose rate calculations, development of the production of annular targets, chemical process of separation and purification of Mo and outfitting of the big reactor hot cell.

At the moment, the first results are the neutronic and the ^{99}Mo activity calculations for different neutron fluxes and irradiation times (using Scale-4.4a), the design and construction of the draw die and welding assemblies to use for the target production, the preparation of synthetic solutions emulating the LEU foil dissolution and the decommissioning of the reactor hot cell to use in this project.

Introduction

Since 1975, the Chilean Nuclear Energy Commission (CCHEN) is producing in its nuclear reactor RECH-1 radioisotopes as ^{99m}Tc, ^{131}I, ^{192}Ir, ^{153}Sm and others. For the last two years, CCHEN has been producing and selling to the different Nuclear Medicine Centers of the country Mo-Tc generators using Canadian fission ^{99}Mo. CCHEN´s challenge is now the indigenous fission ^{99}Mo production irradiating LEU foils. The development of the work is facilitated thanks to an IAEA Coordinated Research Project (CRP) supported by ANL, USA.

The different actions of this project are: - neutronic, thermal-hydraulic and dose rate calculations, - target fabrication and irradiation device development, - arrangement of the concrete hot cell, - irradiated target disassembling, - radiochemical separation and purification processes, - product characterization, - wastes management, - licensing of the whole process and facilities.

The goal is to initiate the routine irradiation of LEU targets on the first trimester of 2008.

Neutronic and Activity Calculations

Introduction

The RECH-1 research reactor is a pool type reactor with a nominal thermal power of 5 MW. The reactor is operated by the Chilean Nuclear Energy Commission at La Reina Nuclear Center. The RECH-1 is a light water-moderated, water-cooled and beryllium-reflected reactor

and it employs a flat plate MTR-type fuel with low enriched uranium. Six blade-plates control absorbers pass through the core in three groups of two. The present core configuration, Nº 61, has 32 LEU fuel elements containing U_3Si_2-Al and the maximum thermal neutron flux is about 8.0×10^{13} [n cm^{-2} s^{-1}] at 5 MW in the D5 and D6 positions (Fig. 1) [1]. The LEU fuel elements were built by the Chilean Fuel Fabrication Plant with a uranium density of 3.4 g/cm^3 [2]. The technical specifications of these fuel elements were developed by the Chilean Manufacturer based on the original HEU assembly and approved by the reactor operator.

	1	2	3	4	5	6	7	8	9	10
G	Bk	Be	Be	Be	Be	Be	Be	Be	Be	Bk
F	Bk	Al	LR60 0.000	LR61 0.000	LR56 1.300	LR57 1.409	LR62 0.000	LR63 0.000	Al	Bk
E	Be	LR53 3.720	LR51 5.949	LR45 12.792	LR01L 38.478	LR02L 39.338	LR46 13.679	LR50 6.204	LR55 3.723	Be
D	Al	Bk	LR47 6.876	LR41 18.158	Cl	Cl	LR42 19.255	LR48 7.860	Bk	Al
C	Be	LR52 3.060	LR49 5.039	LR44 13.373	LR03L 35.342	LR04L 35.338	LR43 14.454	LR82 5.653	LR54 3.650	Be
B	Be	Be	LR66 0.000	LR67 0.000	LR58 1.050	LR59 1.334	LR64 0.000	LR65 0.000	Be	Be
A	R 11/8”	Al	Be	Be	Cl	Cl	Be	Be	Tl	Be
H	Al	Bk	R 1 ½”	Cl	PIBM	PIBM	Cl	Pb	Pb	Al Fn

Fig. 1.- Core configuration Nº 61 with the average burnup, in percent, at beginning of cycle (BOC) for each fuel element

Neutronic and activity calculations

The neutronic calculations were performed for the present core configuration of RECH-1 reactor using WIMS-D [3], [4], [5] and CITATION [6] codes, neutronic programs used routinely in the fuel management of this reactor. Different cell models were needed to generate appropriate cross sections for the various reactor regions in an energy five-group structure. The WIMS-D code was used to generate the multigroup nuclear constants library for different regions as a function of burnup, the main transport calculation was performed in 20 energy groups, condensing to 5 groups for the diffusion theory calculations (Table 1).

Broad Groups	Fine Groups	Energy Interval [eV]
1	1 - 5	0.821 E+06 - 1.000 E+07
2	6 – 15	5.530 E+03 - 0.821 E+06
3	16 – 30	2.100 - 5.530 E+03
4	31 – 45	0.625 - 2.100
5	46 – 69	0.000 - 0.625

Table 1.- Energy five-group structure used in the diffusion theory calculations

In order to calculate the cross sections for fuel element, a unit cell formed by half thickness of meat, the cladding, half thickness of the coolant channel and a homogeneous extra zone was used. The extra region includes the aluminum in the plates beyond the width of the meat, the aluminum side plates, the water beyond the width of the meat and the water channels surrounding the fuel element. In a diffusion calculation, a fuel element will be represented by three zones, the central zone is a homogenization of the meat, cladding and the cooling and the lateral zones are identical to each other and are formed by a homogenous mixture of aluminum and water. The nuclear constants for beryllium elements, aluminum elements, blanking elements, absorber tailplates and the water as a reflector have been obtained using different macrocell models [7], [8], [9].

The neutronic calculations for the core configuration have been performed using the diffusion code CITATION in two dimensions with a five-group structure and bucklings imposed for the axial dimension.

In order to determine the burnup of the fuel element at the end of cycle (EOC) of a configuration core, it is required to know the burnup factor at the beginning of cycle (BOC) for each fuel element and the energy generated during the cycle. The burnup factors for each core configuration at BOC have been generated using CITATION, whereas the energy has been estimated from the power histogram of the reactor. Libraries as a function of the burnup have not been generated for beryllium elements, aluminum elements, blanking elements, absorber tailplates and the water as a reflector.

The neutronic calculations were performed supposing that the target would be introduced in the D5 position of the reactor grid (Fig. 1), the present maximum neutron flux position of RECH-1 reactor. In this case, the reactivity increases in 198 pcm, the mean neutron thermal flux is 6.63×10^{13} n cm^{-2} s^{-1} and the power generated in the target is 4.39 KW.

The fission product activities were calculated using ORIGEN-S code from the SCALE-4.4a system [10], considering an irradiation at constant thermal neutron flux, 6.63×10^{13} n cm^{-2} s^{-1}, and an irradiation time of 3 days for a target containing 8g of uranium 19.75% enriched. Fission product activities were estimated also using SAS2 (Shielding Analysis Sequence Nº 2) code from SCALE-4.4a for different thermal neutron fluxes and irradiation times [11].

The irradiation time has a large impact on specific activity. All the molybdenum isotopes from ^{95}Mo to ^{100}Mo are produced from fission and they continue to build up, making the ^{99}Mo Ci content per gram of molybdenum material decrease with increased irradiation time. A determination of the specific activity of the ^{99}Mo must consider the fission products which are stable isotopes of molybdenum (^{97}Mo, ^{98}Mo and ^{100}Mo) [12].

The results of the ORIGEN-S calculations during the irradiation period are presented in the Table 2, where A_{sp} is the specific activity of ^{99}Mo in Ci per mg of Mo. At end-of-irradiation, the activity of ^{99}Mo is 105 Ci, that is 13.08 Ci ^{99}Mo per gram of 19.75% enriched uranium irradiated, the specific activity of ^{99}Mo is 103.00 Ci per milligram of molybdenum (^{97}Mo, ^{98}Mo, ^{99}Mo and ^{100}Mo), the total activity of the actinides is 18.75 Ci/g U and the total activity of the fission products is 1963 Ci/g U.

t_i, [h]	16.0	24.0	32.0	40.0	48.0	56.0	64.0	72.0
^{99}Mo, [Ci]	30.58	44.02	56.17	67.69	78.25	87.85	96.49	105.00
A_{sp} [Ci/mg Mo]	142.83	134.82	127.37	121.61	116.44	111.48	106.97	103.00

Table 2.- Activity of ^{99}Mo and specific activity of ^{99}Mo, A_{sp}, Ci per mg of Mo (^{97}Mo, ^{98}Mo, ^{99}Mo and ^{100}Mo) for different irradiation times

At the end of the irradiation, the LEU foil target will be allowed to decay in the reactor pool for a period of 6 hours minimum. Prior to reactor start up, the irradiated target will be removed from the reactor pool and transported to the hot cell for disassembly. Allowing the target to decay in the reactor pool for 6 hours will reduce the end-of-irradiation total fission product activity in 86%.

t_d, h	0.0	1.0	2.0	3.0	4.0	5.0	6.0	7.0	8.0	9.0	10.0
A,Ci	78.2	77.4	76.6	75.8	75.0	74.2	73.5	72.7	71.9	71.2	70.4
A_{Tfp}	1938	473	374	324	290	265	245	228	214	201	190

Table 3.- Activity of ^{99}Mo and total activity of fission products, A_{Tfp}, in Ci/g U after 48 hours of irradiation and different decay times

t_d, h	0.0	1.0	2.0	3.0	4.0	5.0	6.0	7.0	8.0	9.0	10.0
A,Ci	105.0	104.0	102.0	101.0	100.0	99.3	98.3	97.2	96.2	95.2	94.2
A_{Tfp}	1963	505	406	356	323	296	276	259	244	231	220

Table 4.- Activity of ^{99}Mo and total activity of fission products, A_{Tfp}, in Ci/g U after 72 hours of irradiation and different decay times

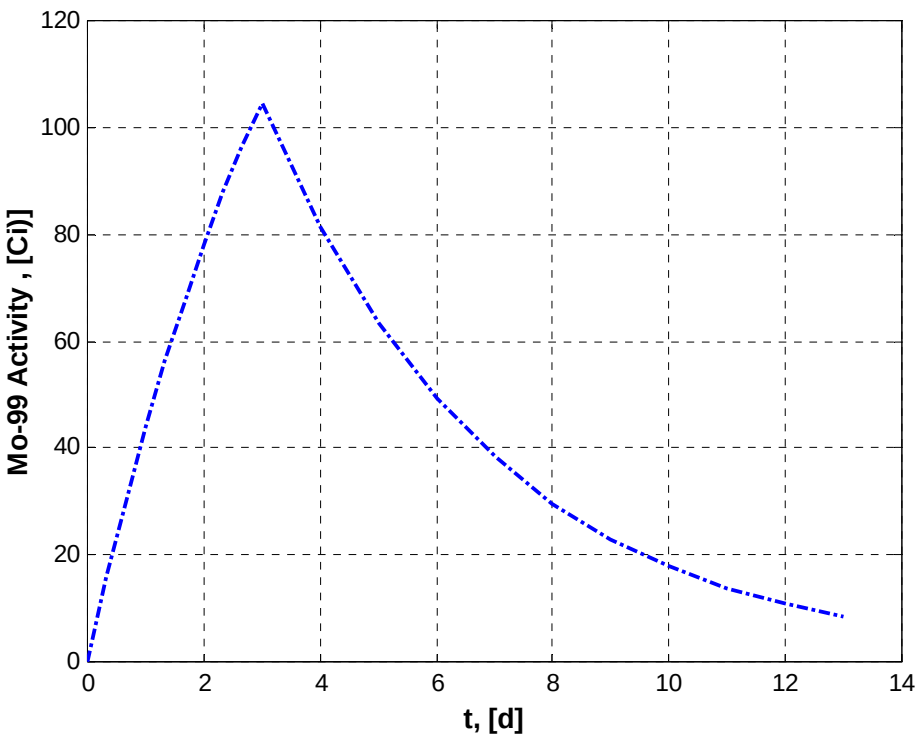

Fig 2.- ^{99}Mo activity for 8 grams of 19.75% enriched uranium, an irradiation time of 3 days and $\Phi_{th} = 6.63\times10^{13}$ n cm^{-2} s^{-1}

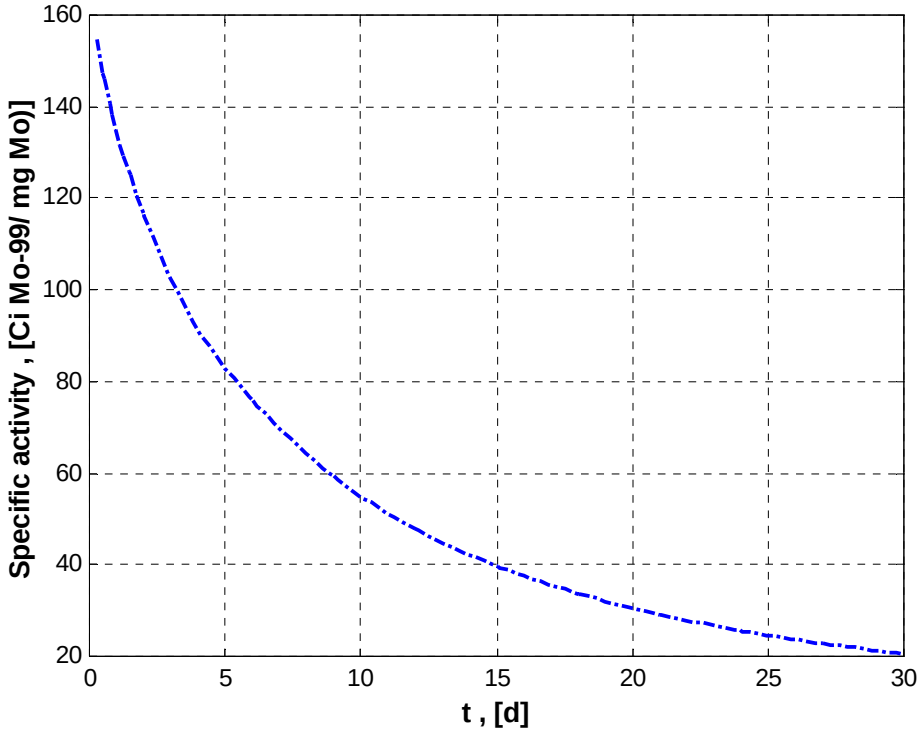

Fig. 3.- Specific activity of ^{99}Mo per mg of Mo (^{97}Mo, ^{98}Mo, ^{99}Mo and ^{100}Mo) for different irradiation times, considering a target of 8 grams of 19.75% enriched uranium and Φ_{th} = 6.63×10^{13} n cm^{-2} s^{-1}

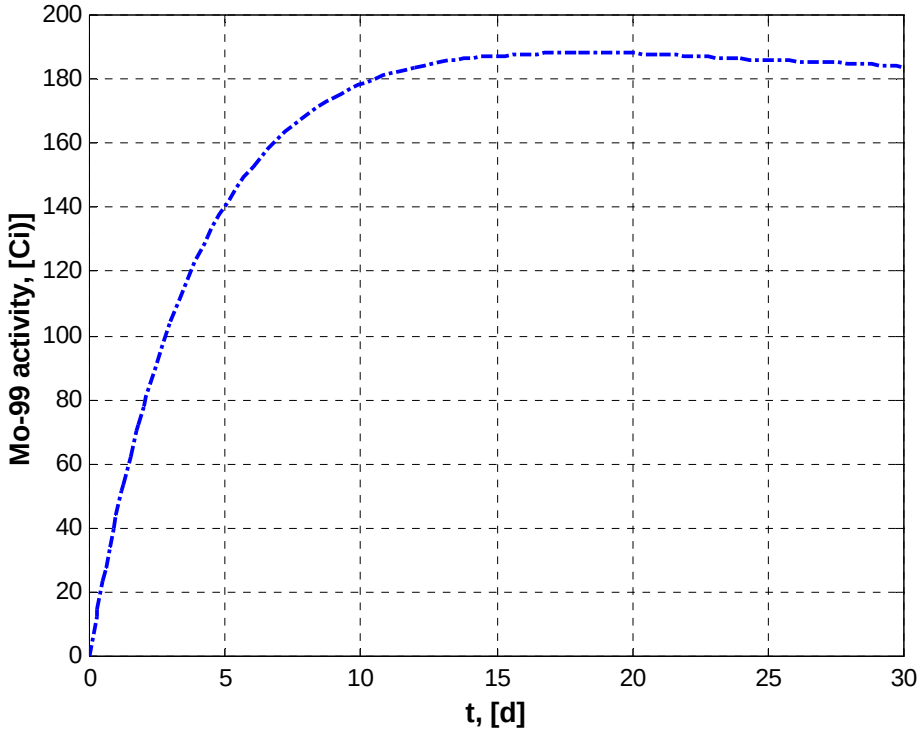

Fig. 4.- ^{99}Mo activity for 8 grams of 19.75 % enriched uranium, Φ_{th} = 6.63×10^{13} n cm^{-2} s^{-1} and different irradiation times

Dose Rate Calculations

Dose rate calculations have been performed using ISOSHLD [13] for the 72 hours irradiated target inside the hot cell, for reactor pool decay times going from 7 to 10 hours, at two different distances from the hot cell window (1.20 m in thickness). Also dose rate calculations were done at the irradiated target lead transport flask, at a distance of 1 cm, 100 cm and 200 cm from the outer flask wall (15 cm in thickness). The results are presented in Tables 5 and 6.

t_d, h	0	7	8	9	10
Dosis mR/h	8.92	0.557	0.509	0.468	0.439

Table 5.- Dose rate at 1cm from hot cell window at different reactor pool decay times

t_d, h	0	7	8	9	10
D_{1cm} mR/h	23080	2520	2180	1930	1740
D_{100cm} mR/h	962	105	91	80	72
D_{200cm} mR/h	294	32	28	25	22

Table 6.- Dose rate at 1 cm, 100 cm, 200 cm from outer transfer flask wall at different reactor pool decay times

LEU Foil Annular Target Fabrication

The Chilean Fuel Fabrication Plant is preparing to produce for this project targets for irradiation using LEU uranium foil, encapsulated between two Al 3003 concentric tubes sealed by means of TIG welding.

The designs and fabrication processes, including assembling and disassembling of the LEU Foil Annular Targets were provided by ANL and Batan during the Workshop on LEU Foil Target Fabrication, Irradiation, and Chemical Processing using the Modified Cintichem Technique, held in Nuclear National Energy Agency (BATAN), Indonesia, in March 2006 [14], [15].

Before the production of prototypes, it has been necessary to design and to manufacture the tools and devices for: machining of aluminum tubes, welding and sealing of the annular tubes, tool for the adjustment (expansion) of the concentric tubes, rolling of the concentric tubes for diameter sizing and, finally, the design of the machine for cutting the outer aluminum tube for the recovery of the irradiated uranium and nickel foils.

A special welding rotating device for sealing the concentric tubes was built. It is capable to turn the assembly at a speed of 3 rpm approximately, while the welding operator keeps leaning the torch on the table of the device until welding of the two concentric tubes assembly is completely finished. The start and stop operations of this TIG welding device are done by the operator by means of a foot switch. In Figure 5, details of the TIG welding device are shown. Notice that the rotating part is the target holder and his respective chiller (made of copper). In Figure 6 some already welded test tubes are shown. These tubes samples preserve the original diameters and thickness sizes, but they were manufactured of smaller lengths for better material use.

Figure 5.- Details of TIG welding device for target. (a) Target holder with copper chiller (b) Welding operation and (c) TIG welding device with table.

Figure 6.- TIG welded test aluminum annular tubes (specimens)

It was also designed and constructed the tool for the adjustment (expansion) of the concentric inner tube against the outer one.

Figure 7.- Draw die assembly

In general, all necessary tools for the elaboration of the targets are being manufactured using the same designs provided in the Workshop held in Batan, Indonesia, and according to the program, the expected date for the first finished target prototype is the end of this year.

However, the disassembling of targets inside the hot cell has been programmed for 2007. For this activity a new design of cutting machine was made. It will allow to do the transverse and long cuts in a more easy and safe way.

Figures 8 and 9 show the drawings of the cutting machine for the transverse and long cuts of the targets. Figure 7 shows the transversal cut. In Figure 8 the component identified as B represents a disks holder capable to move up and down, where two cutting disks are mounted and fixed to a distance of 156 mm. Part A of the machine is the tube holder with one clamp to fix the target which must be placed taking care that the ends are centered and the external disassembling mark, previously engraved, be faced up. The operation starts placing the disks holder B to the required height and then the two ends are cutted simultaneously (transverse cutting) leaving the target with a length of 156mm. For that, the cutting disks must be running before the tube holder A is moved toward the disks holder. The tube holder must be moved until the cutting of the tubes was completed. The advance speed of the tube holder must be proper until the end of running was previously fixed. The advance of the tube holder will be done by means of a driver screw commanded by a motorized axis located in the inferior part of the tube holder, with its respective running limits.

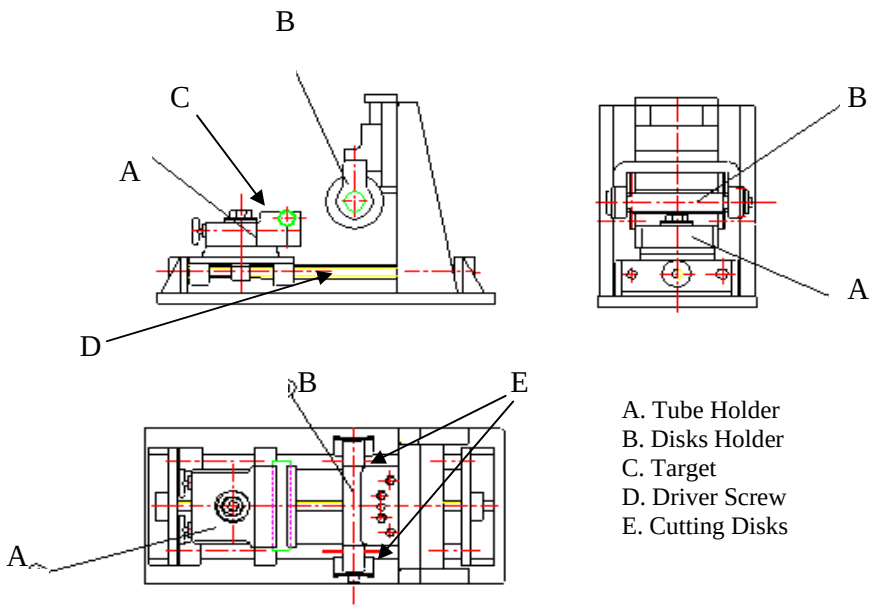

Figure 8- Drawings of cutting machine for Targets; transversal cutting operation

Once the transverse cutting were done, the fixation bolt must be released and the tube holder table is clockwise rotated in 90º and the bolt is tighten again. The disks holder is placed to the exact height for doing the long cut of the target in order to cut of the wall, only from the external tube. To do the long cut, the tube holder will be moved by means of a driving screw moved by a motorized axis with its respective end of running. Finally, the long cut must be done turning on the cutting disks and moving the tube holder, and cutting until the depth previously selected by the end of running actuators. After that, the tube holder is moved toward the starting position and the target can be released from the fixer clamp. The separation of the cut outer tube from the inner one, and the recovery of the uranium and nickel foils are done according to the standard procedures learned in the Workshop held in BATAN, Indonesia, in March 2006.

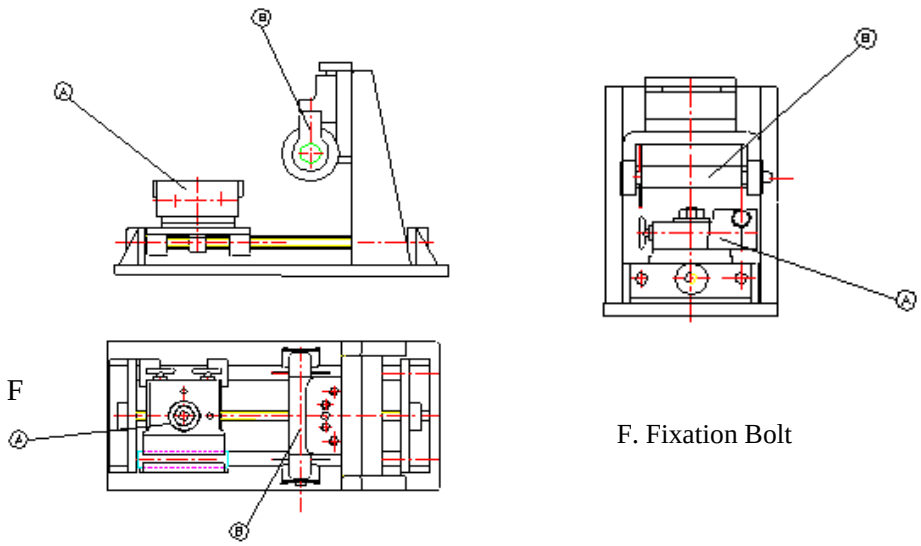

Figure 9- Drawings of cutting machine for targets; long cutting operation

Radiochemical Processes

Using the documents given by Dr. Vandegrift at the Workshop in BATAN, Indonesia [16], we have studied the radiochemical processes of dissolution of the irradiated target, separation of the fission molybdenum by precipitation, dissolution of the molybdenum precipitate and purification of the molybdenum solution. We are just beginning to work with synthetic solutions prepared with natural uranium and nickel salts.

Decommissioning of the Reactor Hot Cell

The Reactor Hot Cell was used by the Reactor staff for fuel elements burn-up measurements that are now done directly in the second Reactor pool. It was decommissioned, and now doing different activities for its use for the disassembling of the irradiated target and the whole radiochemical modified Cintichem process.

Conclusions

At the end of this year, neutronic and molybdenum and fission products activity calculations will be done; also the equipments needed for the target fabrication. During 2007, thermal-hydraulic calculations will be done together with the irradiation device and the cutting machine construction. Also the arrangements of the concrete hot cell, the radiochemical process, the product characterization, the wastes management and the licensing activities. First in pile target irradiation will be done at the beginning of 2008.

We thanks the IAEA and ANL support, specially Dr. George Vandegrift´s technical support.

References

[1] Daie, J., Klein, J., Medel, J. “Conversión del Reactor RECH-1”. Informe Interno. Departamento de Aplicaciones Nucleares. CCHEN. Septiembre, 2006.

[2] Medel, J., Mutis, O. Klein, J. "Conversión del RECH-1 a Combustible de Bajo Enriquecimiento". Informe Interno. Departamento de Aplicaciones Nucleares. CCHEN. 1994

[3] Ahnert, C. “Programa WIMS-TRACA para el Cálculo de Elementos Combustibles. Manual del Usuario y Datos de Entrada”. Junio, 1979.

[4] Askew, J., Fayers, F., Kemshell, P. “A General Description of the Lattice Code Wims”. Journal of the British Nuclear Energy Society. Octubre, 1966.

[5] Roth, M., Macdougall, J., Kemshell, P. “The Preparation of Input Data for Wims”. General Reactor Physics Division, Atomic Energy Establishment. Winfrith. 1967.

[6] Fowler, T. B., Vondy, D. R., Cunningham, G. W. “Nuclear Reactor Core Analysis Code: CITATION”. ORNL-TM-2496. Julio, 1969.

[7] Medel, J., Pereda, C. “Cálculo del Quemado de Elementos Combustibles para Configuraciones de Núcleo MEU-LEU del RECH-1”. Workshop on “Research Reactor Spent Fuel Characterization”. Sao Paulo, Brasil. 19 – 23 Noviembre, 2001.

[8] Medel, J. “Proposición de la 1ª Configuración de Núcleo Mixta MEU-LEU para el RECH-1”. Informe Interno. Departamento de Aplicaciones Nucleares. CCHEN. Noviembre, 1998.

[9] Medel, J. “Gestión de Combustible y Análisis Neutrónico para el RECH-1”. Informe Interno. Departamento Aplicaciones de los Isótopos y las Radiaciones. CCHEN. Mayo, 1992.

[10] SCALE: A Modular Code System for Performing Standardized Computer Analysis for Licensing Evaluation, NUREG/CR-0200, Rev. 6, Vols. I, II and III (May 2000). Available from Radiation Safety Information Computational Center at ORNL as CCC-545.

[11] Medel, J. “Producción de ^{99}Mo de fisión mediante la irradiación de láminas de uranio metálico de bajo enriquecimiento en el RECH-1”. Subdepartamento Reactores Nucleares. Departamento Aplicaciones Nucleares. Comisión Chilena de Energía Nuclear. Junio, 2006.

[12] Production of Fission Product Mo-99 Using the LEU-Modified Cintichem Process. Feasibility Study- Part 1. University of Missouri Research Reactor. TDR-0102. July 2006.

[13] RSIC Computer Code Collection. ISOSHLD. General Purpose Isotope Shielding Analysis. Oak Ridge National Laboratory. 1973.

[14] Leyva, Argentina. “Assembly Procedures for Annular LEU Target”. Workshop on “LEU Foil Target Fabrication, Irradiation, and Chemical Processing using Modified Cintichem Technique”, BATAN, Indonesia, 2-6 March, 2006.

[15] Bakel, Allen; Vandegrift, George. “Target Disassembly”. Workshop id. [14].

[16] Vandegrift, George. “ANL LEU-Modified Cintichem Process”. Workshop id. [14].