THE 2005 RERTR INTERNATIONAL MEETING
November 6-10, 2005
The Fairmont Copley Plaza
Boston, Massachusetts, U.S.A

IRRADIATION TESTING OF HIGH DENSITY U-MO FUELS IN THE ATR

D. M. Wachs, R. G. Ambrosek, G. S. Chang, and M. K. Meyer
Nuclear Fuels and Materials Department
Idaho National Laboratory, P.O. Box 1625, Idaho Falls, ID, 83415-1688, USA

ABSTRACT

A variety of high uranium density (uranium molybdenum alloy based) research reactor fuels are being irradiated in the Advanced Test Reactor at the Idaho National Laboratory. The RERTR-7A, -7B, and -8 experiments will consist of three test trains containing 66 miniplates of various fuel meat compositions that will be subjected to a near prototypical reactor environment. The RERTR-7A and –7B experiments will explore the influence of modified matrix materials (RERTR-7A) and fuel alloys (RERTR-7B) on fuel/matrix chemical interaction. The three experiments will also contain a number of monolithic type fuel plates that will substantially expand their irradiation performance database. The modified matrix materials include 6061-Al, 4043-Al, Al-0.5 Si, Al-2.0Si, and Mg. The modified fuel alloys used in RERTR-7B will include small amounts of Zr or Ti alloyed with the U-Mo fuel. The plates in RERTR-7A and –7B will be operated with peak surface heat flux, surface temperature, centerline temperature, and burnup of approximately 350 W/cm^2, 200ºC, 250ºC, and 70% LEU equivalent, respectively. The RERTR-8 experiment will expose 16 plates to a short (15 day) high power irradiation cycle. The RERTR-8 test train will consist of one capsule (eight miniplates) removed from the RERTR-7B experiment following one irradiation cycle and one fresh capsule (eight miniplates). The capsules will be irradiated for one additional ATR cycle (~50 days) prior to the high power cycle. The peak surface heat flux in the RERTR-8 experiment will be on the order of 550 W/cm^2.

1. Introduction

The Reduced Enrichment for Research and Test Reactors (RERTR) advanced fuel development program was reinstated by the United States Department of Energy in the mid 1990's with the goal of developing fuel that will allow the conversion to low enriched uranium (LEU) of the remaining research reactors which have fissile atom density requirements too high to be met by existing fuel types [1]. To meet this goal, a series of irradiation experiments are being performed in the Idaho

National Laboratory's (INL) Advanced Test Reactor (ATR). Experiments have progressively become more specialized as the focus has shifted from exploratory to specific with increasing understanding of the fuel behavior.

The previous six irradiation tests (RERTR-1 through –6) have demonstrated the excellent irradiation behavior of the uranium molybdenum alloy fuel phase. They have also, however, revealed chemical interactions between the fuel and matrix that in some cases result in unacceptable fuel swelling. The interaction has only been problematic when the fuel is operated at high power.

As a result, the RERTR-7 series of experiments has been designed to specifically examine this behavior and the impact that various fuel meat compositions have on the system. Out-of-pile experiments suggest that the presence of silicon in the matrix aluminum or small amounts of titanium or zirconium in the fuel alloy may substantially reduce the fuel/matrix interaction rate [2]. Earlier experiments also showed the promise of monolithic type fuel forms due to the greatly reduced interfacial area and temperature. A number of monolithic fuel plates will be included in these experiments to expand the irradiation performance database. The experiments will be operated at a higher average power than previous experiments to ensure that all the experiments, including those near the test train edge, are operated at relevant conditions since failures have never been observed under low power conditions.

The RERTR-8 experiment will subject several promising candidate fuel compositions to a very high power environment to assess behavior under conditions that bound those to be experienced in actual reactor service. The experiment will help further define potential fuel failure modes.

2. Experiment Hardware

The experiments will utilize hardware similar to that used in previous RERTR irradiation experiments to irradiate a total of 66 mini-plates of mixed composition that will be assembled using various fabrication techniques. The nominal plate geometry is shown in Figure 1. The mini-plates are assembled into capsules containing 2 rows of 4 mini-plates each. A schematic of a capsule is shown in Figure 2. Four capsules are stacked in a basket with spacers on the top and bottom to position the plates across the core centerline. Each test train therefore contains a maximum of 32 mini-plates. The experiment basket assemblies are inserted into one of four 'Large B-Positions' in the Idaho National Laboratory's (INL) Advanced Test Reactor (ATR) as shown in Figure 3. The unique design of the ATR allows its four quadrants to be operated at different lobe powers. The irradiation position is therefore carefully selected for each experiment to achieve the desired thermal and nuclear conditions.

Nominal Fuel Zone
Disp – (3.200 x 0.730 x 0.025)
Mono – (3.250 x 0.750 x 0.010/0.020)

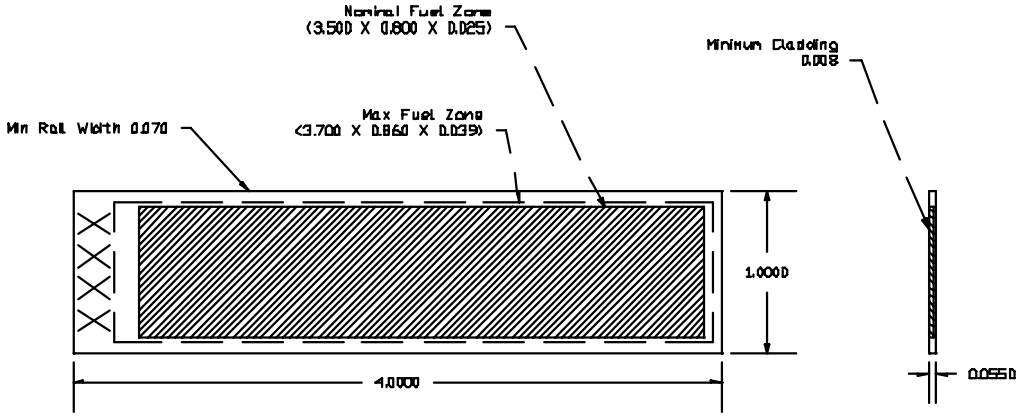

Figure 1. Nominal mini-plate geometry (dimensions shown in inches).

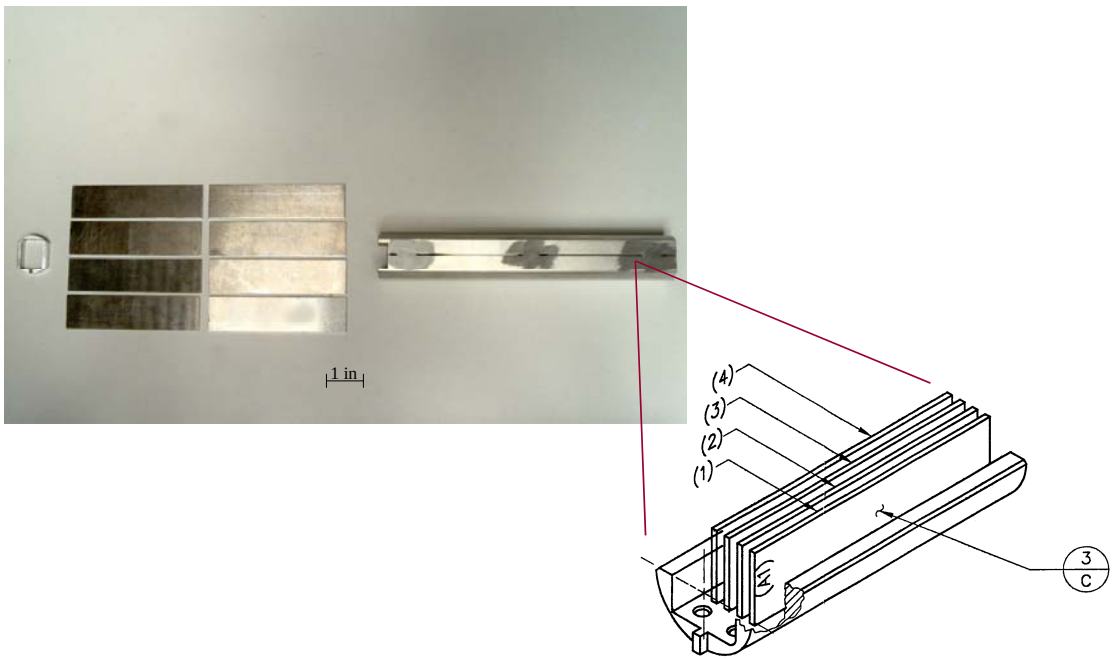

Figure 2. A schematic of the flow through capsule.

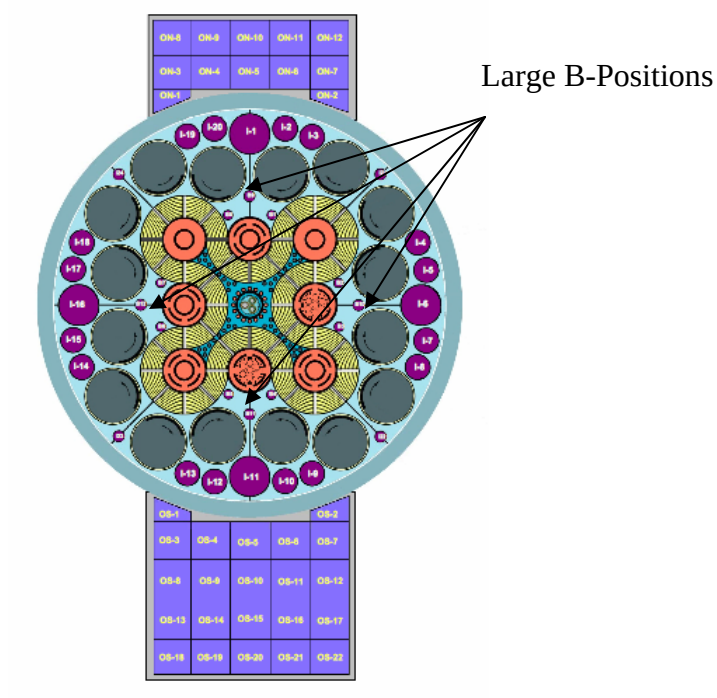

Figure 3. Core layout of the Advanced Test Reactor.

ATR primary coolant will flow through the capsules and directly cool the mini-plates. The reactor coolant is driven through the basket by a nominal 510 kPa (74 psi) pressure differential between the inlet and exit. To estimate the coolant flow rate in the reactor the assembly was flow tested to determine its hydraulic loss coefficient. The pressure drop across the test section was measured as a function of flow rate and the test data was reduced using the Bernoulli equation

$$\frac{\Delta P}{\gamma} + h = \frac{K_{net}}{2gA^2} Q^2 \qquad (1)$$

to plot the reduced pressure against the reduced flow rate (Figure 3). The hydraulic loss coefficient was determined by the linear curve fit shown. Using this value the total experiment flow rate was estimated to be approximately 2700 cm^3/sec (42.9 gpm) during irradiation.

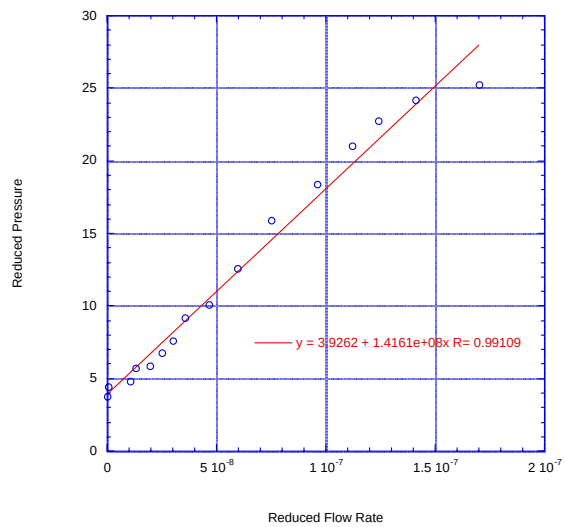

Figure 3. Reduced pressure drop as a function of reduced flow rate for the irradiation test vehicle.

However, it is important to note that the inner and outer flow channels were sized to prevent non-uniform cooling of the outer plate surfaces. The outer flow channels are smaller than the inner flow channels to restrict the coolant flow because the outer channels only cool the surface of one plate. The relative coolant velocities can be estimated from the total flow by noting that total flow is related to the channel flows by

$$Q_{total} = 2\,Q_{outer} + 3\,Q_{innner} \qquad (2).$$

The total head loss for each channel must be equivalent because they share common plena, so the flow rates are therefore related by the hydraulic diameters and equation (2) can be reduced to

$$Q_{inner} = \frac{Q_{total}}{2\frac{A_{outer}}{A_{inner}}\sqrt{\frac{D_{hyd-outer}}{D_{hyd-inner}}} + 3} \qquad (3).$$

The volumetric flow rates (velocities) in the inner and outer channels are approximately 700 cm^3/sec (14 m/sec) and 310 cm^3/sec (11 m/sec), respectively.

3. RERTR-7 Experiment

The primary purpose of the RERTR-7 experiment is to evaluate several potential approaches to controlling the chemical interaction between the U-Mo alloy fuel and the Al matrix. The experiment consists of two separate test trains dubbed RERTR-7A and RERTR-7B. The –7A experiment will focus on examining the impact of minor additions to the dispersion matrix (primarily silicon). The –7B experiment will examine the impact of minor alloying agents in the fuel phase on the same behavior. Both experiments will include multiple monolithic fuel plates to expand the performance database for the fuel type. The experiments will use identical irradiation hardware.

3.1 RERTR-7A

The RERTR-7A experiment consists of 32 mini-plates of various compositions. The full experiment matrix is summarized in Table 1. Of the 32 mini-plates 15 are of dispersion type and 17 are of monolithic type. In the dispersion fuel experiments, the impact of silicon on chemical behavior at the fuel matrix interface will be explored in detail. The monolithic fuel experiments will greatly expand the database of in-pile performance data and will provide specific information on the relative behavior of U-10Mo and U-12Mo fuel alloys.

Out-of-pile experiments have suggested that the presence of silicon in the matrix material significantly reduces the reaction rate between the fuel and matrix [2] but this effect must still be verified for in-pile conditions. Five matrix compositions are incorporated into the experiment matrix including Al-0.5 wt% Si, Al-2.0 wt% Si, Al-4043, Al-6061, and pure aluminum (as a control). The experiment matrix has been constructed to include two plates of each type, which are placed such that at least one is located in a high power position. Although the nominal fuel phase composition is U-7Mo, a pair of U-10Mo/Al-0.5 Si based dispersion plates are also included to compare with U-7Mo/Al-0.5 Si based plates. This will help identify the role molybdenum content plays in the chemical behavior. All the dispersion plates will be fabricated using standard roll bonding techniques.

The monolithic fuel type was first conceived of to limit the total interfacial area between the fuel and matrix and to minimize the temperature at that interface. A small number of plates were tested in the RERTR-5 experiment with promising results. The 17 plates included in this experiment served as the impetus for fabrication technique development and will provide significant data on irradiation performance. The most significant challenge identified to date for monolithic fuels is with fabrication. Plates in this experiment will be fabricated using friction stir welding (FSW) and transient liquid phase bonding (TLPB) techniques.

Three fuel meat alloys, U-7Mo, U-10Mo, and U-12Mo, are included in the experiment. The foil shaped fuel meat used in monolithic fuel also makes internally graded fuel compositions possible. Two 'dual foils' will be included in the experiment that consist of two separate foils (which could later be of different composition or enrichment) laid adjacent to each other within the plate. Another possibility is the incorporation of discrete pillars or burnable poisons. Two plates with 'holed foils' are included to explore this possibility.

Two plates are being provided by the Comision Nacional de Energia Atomica (CNEA) of Argentina to explore additional concepts. One plate consists of silicon coated U-10Mo particles dispersed in Al and the other is a U-10Mo foil clad with Zr rather than Al.

The experiment will be inserted into the Large B-11 (south) position of the ATR, which is typically the highest power position of the four Large B's, in November 2005. The experiment will remain in this position for three full ATR cycles (nominally 50 effective full power days per cycle) during which the fuel will reach roughly 70% equivalent LEU burnup. The beginning of life (BOL) power levels were calculated using MCNP [3], which allowed the nominal BOL, thermal conditions to be calculated [4] for the fuel surface heat flux, surface temperature, and centerline temperature. The preliminary values are summarized in Table 2, final values will be calculated when as-built data is available.

Capsule		Column 1	2	3	4
A	Top	disp U-7Mo Al-4043 Roll	foil U-10Mo 0.01" TLPB	disp U-7Mo Al-0.5 Si Roll	foil U-10Mo 0.02" FSW
	Bottom	foil U-10Mo 0.01" FSW	dual foil U-10Mo 0.01" FSW	disp U-10Mo Al-0.5 Si Roll	foil U-12Mo 0.01" FSW
B	Top	disp U-7Mo Al-6061 Roll	disp U-7Mo Al-2.0 Si Roll	disp U-7Mo Al Roll	foil U-12Mo 0.01" TLPB
	Bottom	Holed foil U-10Mo 0.01" FSW	disp U-7Mo Mg Roll	foil U-10Mo 0.01" FSW	disp* U-10Mo Al Roll
C	Top	dual foil U-10Mo 0.01" FSW	foil U-10Mo 0.01" TLPB	foil U-7Mo 0.01" FSW	foil** U-10Mo 0.01" Roll
	Bottom	foil U-12Mo 0.01" FSW	foil U-12Mo 0.01" TLPB	disp U-7Mo Al-4043 Roll	disp U-10Mo Al-0.5 Si Roll
D	Top	disp U-7Mo Al-6061 Roll	foil U-10Mo 0.01" FSW	disp U-7Mo Al Roll	disp U-7Mo Al-0.5 Si Roll
	Bottom	disp U-7Mo Mg Roll	holed foil U-10Mo 0.01" FSW	disp U-7Mo Al-2.0 Si Roll	fiol U-10Mo 0.02" FSW

key

fuel type
fuel alloy
mat./foil th.
fab. tech.

fuel type

disp	dispersion type fuel
foil	monolithic (foil) type fuel
holed foil	perforated monolithic (foil) fuel type
dual foil	split monolithic (foil) fuel type

fuel alloy

U-7Mo	7 wt% molybdenum fuel alloy
U-10Mo	10 wt% molybdenum fuel alloy
U-12Mo	12 wt% molybdenum fuel alloy

mat./foil th.

Al	aluminum matrix
Al-0.5 Si	aluminum w/ 0.5 wt% silicon matrix
Al-2.0 Si	aluminum w/ 2.0 wt% silicon matrix
Al-4043	Al-4043 matrix
Al-6061	Al-6061 matrix
0.01"	0.01" thick fuel meat foil
0.02"	0.02" thick fuel meat foil

fab. tech.

Roll	Roll bonding
TLPB	Transient liquid phase bonding
FSW	Friction stir welding

*Si coated particles in Al (supplied by CNEA)
** Zr clad foil (supplied by CNEA)

Table 1. RERTR-7A experiment matrix.

Capsule		Fuel Plate	Fuel Alloy	Fuel Form	Plate Surface Heat Flux (W/cm2)	Plate Power (W)	Plate Surface Temp. (°C)	Plate Centerline Temp. (°C)
A	Top	A-1	U-7Mo	disp	195	7030	138	167
		A-2	U-10Mo	foil	115	4161	103	113
		A-3	U-7Mo	disp	139	5021	114	135
		A-4	U-10Mo	thick foil	276	9963	173	202
	Bottom	A-5	U-7Mo	foil	163	5868	126	140
		A-6	U-10Mo	foil	128	4626	111	122
		A-7	U-10Mo	disp	175	6303	131	158
		A-8	U-12Mo	foil	176	6338	132	147
B	Top	B-1	U-7Mo	disp	320	11549	197	246
		B-2	U-7Mo	disp	265	9569	173	214
		B-3	U-7Mo	disp	239	8629	162	199
		B-4	U-12Mo	foil	220	7956	154	173
	Bottom	B-5	U-10Mo	foil	209	7541	152	170
		B-6	U-7Mo	foil	166	5981	134	148
		B-7	U-10Mo	foil	191	6899	145	161
		B-8	U-10Mo	disp	168	6081	135	160
C	Top	C-1	U-10Mo	foil	239	8612	168	189
		C-2	U-10Mo	disp	263	9487	179	219
		C-3	U-7Mo	disp	287	10372	190	233
		C-4	U-10Mo	disp	349	12598	216	269
	Bottom	C-5	U-12Mo	foil	208	7525	159	177
		C-6	U-12Mo	foil	153	5534	135	148
		C-7	U-7Mo	foil	149	5380	133	146
		C-8	U-10Mo	foil	205	7413	157	175
D	Top	D-1	U-7Mo	disp	302	10906	202	248
		D-2	U-10Mo	disp	261	9426	185	225
		D-3	U-7Mo	disp	260	9398	184	224
		D-4	U-7Mo	disp	309	11168	206	253
	Bottom	D-5	U-7Mo	disp	230	8296	175	210
		D-6	U-10Mo	foil	140	5043	136	148
		D-7	U-7Mo	disp	171	6161	149	175
		D-8	U-10Mo	thick foil	327	11797	217	251

Table 2. RERTR-7A BOL thermal conditions.

3.2 RERTR-7B

The RERTR-7B experiment consists of 26 mini-plates and 6 'blanks'. The experiment is scheduled for insertion into the Large B-12 (East) Position of the ATR in January 2006. Capsules A, B, and C will be irradiated for three full ATR cycles (roughly 150 effective full power days) to reach roughly 50% LEU equivalent burnup. The D capsule will be removed after one 50 day cycle to be placed in the RERTR-8 test train. The capsule will be replaced with a blank filled dummy capsule. The objectives of this test are 1) to examine the impact of modified fuel alloys on the fuel/matrix chemical interaction, 2) explore the performance of magnesium matrix dispersion fuels fabricated by a hybrid FSW/rolling process, and 3) collect additional performance data for monolithic fuels. The full experiment matrix is summarized in Table 3.

Similar to the results observed for a silicon doped matrix, out-of-pile tests revealed that minor additions of Ti or Zr to the fuel alloy resulted in greater resistance to chemical interaction between the fuel and matrix material [2]. To examine this behavior under irradiation, four plates with either 1 wt% Ti or 2 wt% Zr in the fuel alloy are included. For these plates the behavior of both the fuel/matrix interface and the fuel itself will be of interest since the irradiation stability of the fuel is dependent on the specific properties of the alloy.

The thermal conditions of the RERTR-7B experiment are expected to be slightly less severe than for RERTR-7A because the B-12 position operates at a slightly lower lobe power (22.5 MW vs. 24.1) than the B-11 position. Detailed neutronic and thermal calculations will be performed prior to experiment insertion.

Capsule		Column 1	Column 2	Column 3	Column 4
A	Top	disp U-7Mo-1Ti Al-4043 Roll	foil U-10Mo 0.01" HIP	disp U-7Mo Mg Hybrid	disp U-7Mo-2Zr Al-4043 Roll
	Bottom		disp U-7Mo-1Ti Al-4045 Roll	disp U-7Mo-2Zr Al-4045 Roll	foil U-7Mo 0.01" HIP
B	Top	foil U-7Mo 0.01" HIP		disp U-7Mo Mg Hybrid	
	Bottom	foil U-7Mo 0.01" HIP	foil U-10Mo 0.01" HIP	disp U-7Mo-2Zr Al-4043 Roll	disp U-7Mo-1Ti Al-4045 Roll
C	Top	disp U-7Mo-2Zr Al-4045 Roll	disp U-7Mo-1Ti Al-4043 Roll	disp U-7Mo Mg Hybrid	
	Bottom	disp U-7Mo Al Roll	foil U-10Mo 0.01" HIP		
D	Top	disp U-7Mo-2Zr Al-4043 Roll	foil U-10Mo 0.01" FSW	disp U-7Mo Al-4043 Roll	disp U-7Mo Mg Roll
	Bottom	disp U-7Mo Al Roll	disp U-7Mo Al-4043 Roll	foil U-10Mo 0.01" FSW	disp U-7Mo-1Ti Al-4043 Roll

key

fuel type
fuel alloy
mat./foil th.
fab. tech.

fuel type

disp	dispersion type fuel
foil	monolithic (foil) type fuel

fuel alloy

U-7Mo	7 wt% molybdenum fuel alloy
U-10Mo	10 wt% molybdenum fuel alloy
U-7Mo-1Ti	7 wt% molybdenum and 1 wt% titanium fuel alloy
U-7Mo-2Zr	7 wt% molybdenum and 2 wt% zirconium fuel alloy

mat./foil th.

Al	aluminum matrix
Al-4043	Al-4043 matrix
Al-4045	Al-4045 matrix
Mg	agnesium matrix
0.01"	0.01" thick fuel meat foil

fab. tech.

Roll	Roll bonding
HIP	Hot isostatic press
FSW	Friction stir welding
Hybrid	Friction stir weld to seal plate then rolled

Table 3. RERTR-7B experiment matrix.

4. RERTR-8 Experiment

The RERTR-8 experiment consists of 16 mini-plates assembled into two capsules (B and C) that will be subjected to a 15 day high power cycle (called a PALM cycle) that will push the peak plate surface heat fluxes up to roughly 550 W/cm^2. Prior to the PALM cycle the test train will be subjected to one standard 50 day cycle such that capsule B will have been irradiated for one 50 day cycle and capsule C will have been irradiated for two 50 day cycles (one while in the RERTR-7B experiment). The experiment matrix consists of several promising fuel types examined in earlier tests including 12 dispersion plates and 4 monolithic plates. The experiment matrix is summarized in Table 4. The RERTR-8 experiment test train will be inserted into the ATR in March 2006 and will begin the PALM cycle in May 2006.

Capsule		Column 1	Column 2	Column 3	Column 4
A	Top				
	Bottom				
B	Top	disp U-7Mo-2Zr Al-4043 Roll	foil U-10Mo 0.01" FSW	disp U-7Mo Al-4043 Roll	disp U-7Mo Mg Roll
	Bottom	disp U-7Mo Al Roll	disp U-7Mo Al-4043 Roll	foil U-10Mo 0.01" FSW	disp U-7Mo-1Ti Al-4043 Roll
C	Top	disp U-7Mo-2Zr Al-4043 Roll	foil U-10Mo 0.01" FSW	disp U-7Mo Al-4043 Roll	disp U-7Mo Mg Roll
	Bottom	disp U-7Mo Al Roll	disp U-7Mo Al-4043 Roll	foil U-10Mo 0.01" FSW	disp U-7Mo-1Ti Al-4043 Roll
D	Top				
	Bottom				

Table 4. RERTR-8 experiment matrix.

5. Summary

Three test trains containing a variety of U-Mo alloy based fuels will be irradiated in the Advanced Test Reactor at the Idaho National Laboratory. The RERTR-7A, -7B, and -8 experiment test trains will contain 67 miniplates of various fuel meat compositions that will be subjected to a near prototypical reactor environment. The RERTR-7A and –7B experiments will explore the influence of modified matrix materials (RERTR-7A) and fuel alloys (RERTR-7B) on fuel/matrix chemical interaction. The three experiments will also contain a number of monolithic type fuel plates that will substantially expand their irradiation performance database. The modified matrix materials include 6061-Al, 4043-Al, Al-0.5 Si, Al-2.0Si, and Mg. The fuel alloys will include small amounts of Zr or Ti. The plates in RERTR-7A and –7B will be operated with peak surface heat flux, surface temperature, centerline temperature, and peak burnup of 350 W/cm^2, 200ºC, 250ºC, and 70% respectively. The RERTR-8 experiment will expose 16 plates to a short (15 day) high power irradiation cycle. The RERTR-8 test train will consist of one capsule (eight miniplates) removed from the RERTR-7B experiment following one irradiation cycle and one fresh capsule (eight miniplates). The capsules will be irradiated for one additional ATR cycle (~50 days) prior to the high power cycle. The peak surface heat flux in the RERTR-8 experiment will be on the order of 550 W/cm^2.

6. References

[1] J. L Snelgrove et al. "Development of Very-High-Density Fuels for RERTR Program," Proceedings of the XIX International Meeting on Reduced Enrichment for Research and Test Reactors, Seoul Korea, Nevada, 7-10 October 1996.

[2] Y. S. Kim and G. L. Hofman, 'Third Element Addition in U-Mo Fuel to Reduce Porosity Development', Intra-Laboratory Memo, February 2. 2005.

[3] G. S. Chang, 'Physics Analysis of the RERTR-7 and Bounding Cases in B-11 at Beginning of a Typical Cycle', EDF-5906, October 25, 2005.

[4] D. M. Wachs, 'Estimation of Critical Thermal Hydraulic Conditions for RERTR-7', EDF-5671, October 27, 2005.