COMPLETION OF THE SAFETY ANALYSIS FOR THE WWR-M REACTOR IN UKRAINE TO ALLOW OPERATION USING LEU FUEL

Y. P. Mahlers and A. G. Dyakov
Kiev Institute for Nuclear Research
Kiev 03680, Ukraine

ABSTRACT

The 10 MW, WWR-M research reactor of the Kiev Institute for Nuclear Research is going to be converted from HEU (36%) to LEU (19.75%) fuel. The reactor currently uses HEU (36%) WWR-M2 fuel assemblies (3 tubes, UO_2-Al fuel meat with 1.1 gU/cm^3 and 37.0 g ^{235}U). Candidate LEU replacement fuel assemblies are: LEU WWR-M2 (3 tubes, UO_2-Al fuel meat with 2.5 gU/cm^3 and 41.7 g ^{235}U). To qualify this LEU fuel for conversion of the WWR-M reactor in Ukraine, neutronic and thermal-hydraulic characteristics of LEU fuel equilibrium core and transition mixed core containing both LEU and HEU fuel were calculated. The following accidents were analyzed: spontaneous withdrawal of a control rod bank; incidental falling of a fuel assembly in a cell of the core; partial blockage of coolant flow across the core with accompanying partial melting of the core; full break of the first loop pipe with accompanying full melting of the core. The safety of fresh and depleted HEU and LEU fuel storage was analyzed. The revised safety documentation for LEU conversion of the WWR-M reactor has been reviewed and approved officially by the State Scientific Technical Center, as requested by the Ukrainian Nuclear Regulatory Committee.

1. Introduction

The WWR-M research reactor with light-water coolant and beryllium reflector in Kiev (Ukraine) was jointly studied by the Argonne National Laboratory and Kiev Institute for Nuclear Research for conversion to LEU (19.75%) fuel. Nominal power of the reactor is 10 MW. Available fuel assemblies are WWR-M2 (36%) and WWR-M5 (90%). Candidate LEU replacement fuel assemblies are LEU WWR-M2 (19.75%), which have been tested successfully in the WWR-M reactor in Gatchina by irradiation to over 75% burnup [1]. The fuel assembly parameters and designs are shown in Table 1 and Fig.1 [1, 2, 3].

A study confirming the feasibility of converting the WWR-M research reactor in Ukraine from HEU to LEU fuel has been already completed [4]. With LEU WWR-M2 fuel assemblies, the reactor would require about 10% fewer fuel assemblies per year than with the current WWR-M2 (36%) fuel assemblies. Fast and thermal neutron fluxes in key experiment positions would decrease by only 1 - 2% [4].

To qualify this LEU fuel for conversion of the WWR-M reactor in Kiev and to get the appropriate license of the Ukrainian Nuclear Regulatory Committee, the safety analysis should be performed. The first part of this analyses including break of the supporting grid, spontaneous withdrawal of a control rod bank and incidental falling of a fuel assembly in a cell of the core was presented in the previous report [5].

Table 1. Fuel Assembly Parameters

	WWR-M5	WWR-M2	LEU WWR-M2
Enrichment, %	90	36	19.75
Number of fuel elements	6	3	3
Mass of ^{235}U, g	66	37	41.7
Fuel meat composition	UO_2-Al 1.2 gU/cm^3	UO_2-Al 1.1 gU/cm^3	UO_2-Al 2.5 gU/cm^3
Length of fueled region, cm	50	50	50
Pitch/flat-to-flat, mm	35/33.5	35/32	35/32
Element/clad/meat, mm	1.25/0.43/0.39	2.5/0.76/0.98	2.5/0.78/0.94
Specific heat transfer surface, cm^2/cm^3	6.6	3.67	3.67
Hydraulic resistance coefficient	6.5	4.35	4.35
Relative coolant velocities between fuel elements (starting from the center)	0.90; 1.01; 1.08; 0.98; 1.06; 0.88	1.18; 0.89; 1.05; 0.86	1.18; 0.89; 1.05; 0.86

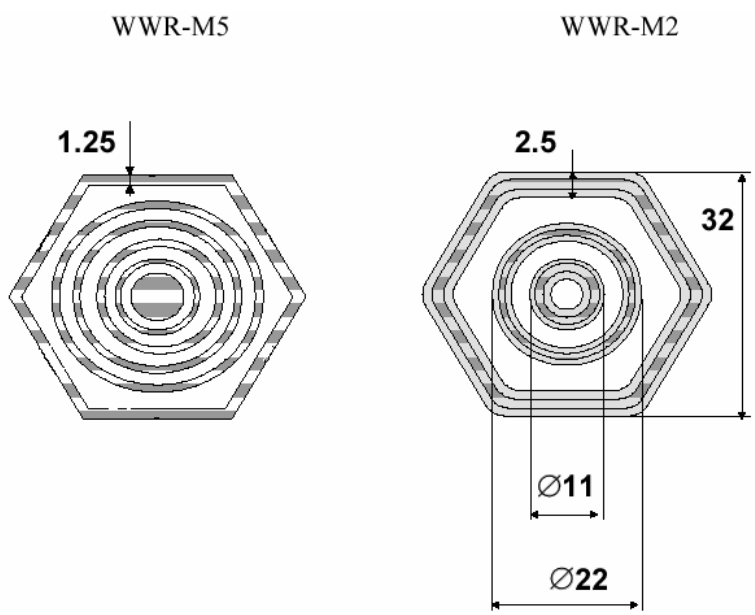

Fig.1. Fuel Assembly Designs

2. Analysis of the safety of the fresh and spent fuel storage

The main nuclear safety requirement of the Ukrainian regulation regarding nuclear fuel storage is that maximum effective multiplication factor should be less than 0.95 for any possible density of water [6]. Thus, effective multiplication factor should be calculated for the range of water density from 0 to 1g/cm^3. All the calculations are performed using the MCNP-4C code based on the Monte Carlo method [7].

In the fresh fuel storage, LEU WWR-M2 fuel assemblies are placed in the containers shown in Fig. 2. For criticality calculation, a conservative approach is applied. In this approach, number of the containers is assumed to be infinite. Distance between them is assumed to be zero. Enrichment, mass of ^{235}U in a fuel assembly and length of fueled region are assumed to be maximum possible: 20.0%, 43.8 g and 52cm, respectively. Dependence of the effective multiplication factor on water density is demonstrated in Fig.3. As we can see, the fresh LEU fuel storage meets the nuclear safety requirements of the Ukrainian regulation.

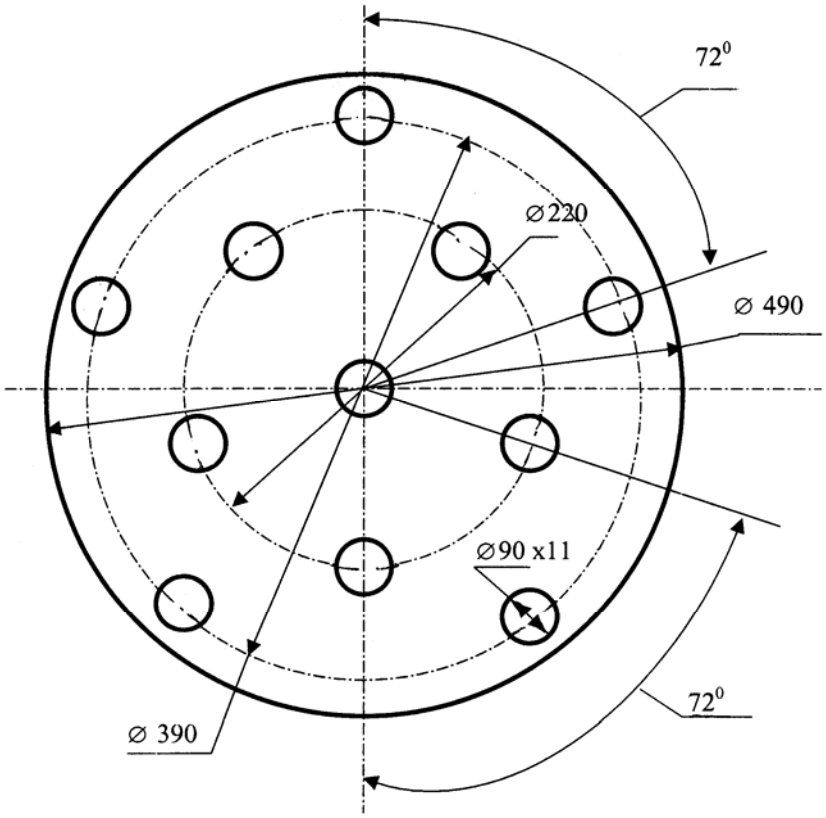

Fig. 2. Container for storage of fresh LEU WWR-M2 fuel assemblies (a triple fuel assembly or three single fuel assemblies are placed in each of 11 locations)

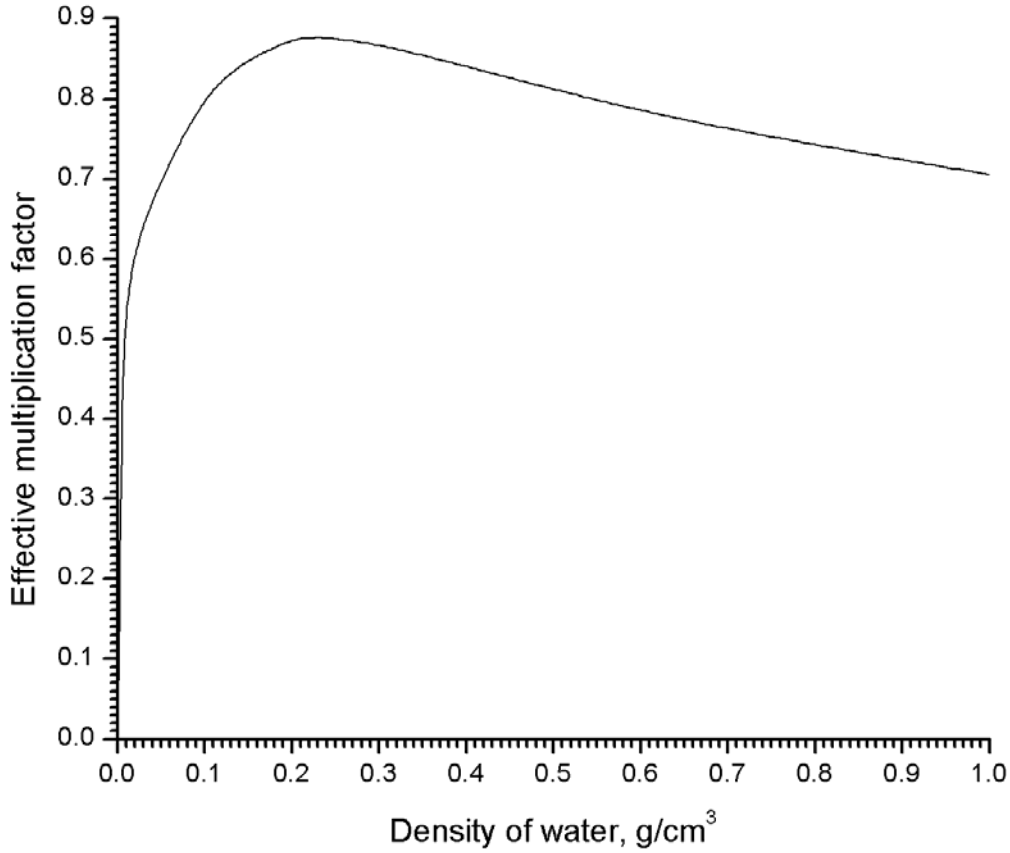

Fig. 3. Dependence of the effective multiplication factor on water density for fresh fuel storage

In the spent fuel storage, LEU WWR-M2 fuel assemblies and absorbing rods are located in hexagonal lattice, as shown in Fig 4. Number of single LEU WWR-M2 fuel assemblies per one absorber for infinite lattice is 5 (fuel assemblies are not placed in one of each six locations, as shown in Fig. 4). An absorbing rod and displacer are depicted in Fig. 5. Material of absorbers is B_4C (natural boron). Minimal density of B_4C is 1.33 g/cm^3. Minimal diameter and height of absorbing rods are 2.5 and 60 cm, respectively. For criticality calculation, a conservative approach is applied. In this approach, number of fuel assemblies is assumed to be infinite. All fuel assemblies are assumed to be fresh. Enrichment, mass of ^{235}U in a fuel assembly and length of fueled region are assumed to be maximum possible: 20.0%, 43.8 g and 52cm, respectively. B_4C density as well as diameter and height of absorbing rods are assumed to be minimum possible: 1.33 g/cm^3, 2.5 cm and 60 cm, respectively. Dependence of the effective multiplication factor on water density is demonstrated in Fig. 6. As we can see, the spent LEU fuel storage meets the nuclear safety requirements of the Ukrainian regulation.

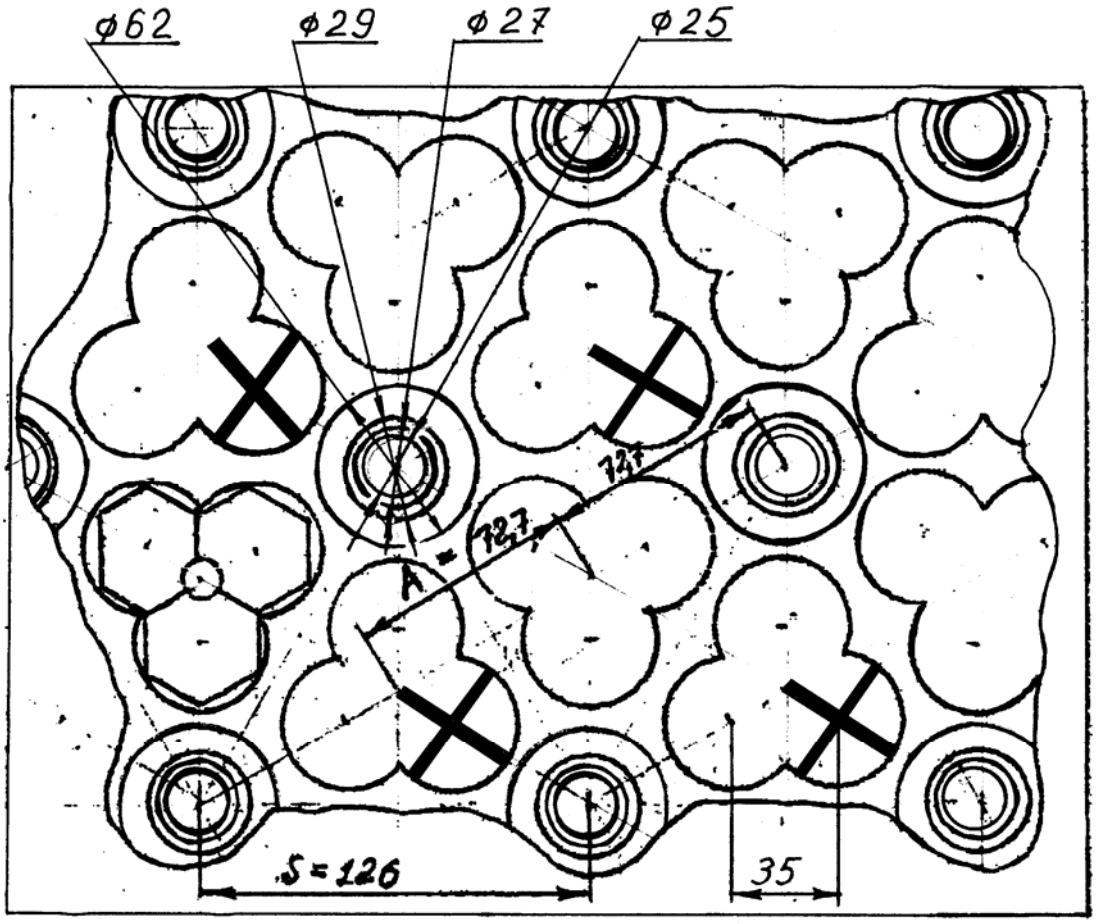

Fig. 4. Placement of LEU WWR-M2 fuel assemblies in the spent fuel storage

(fuel assemblies are not placed in the locations marked by "**X**")

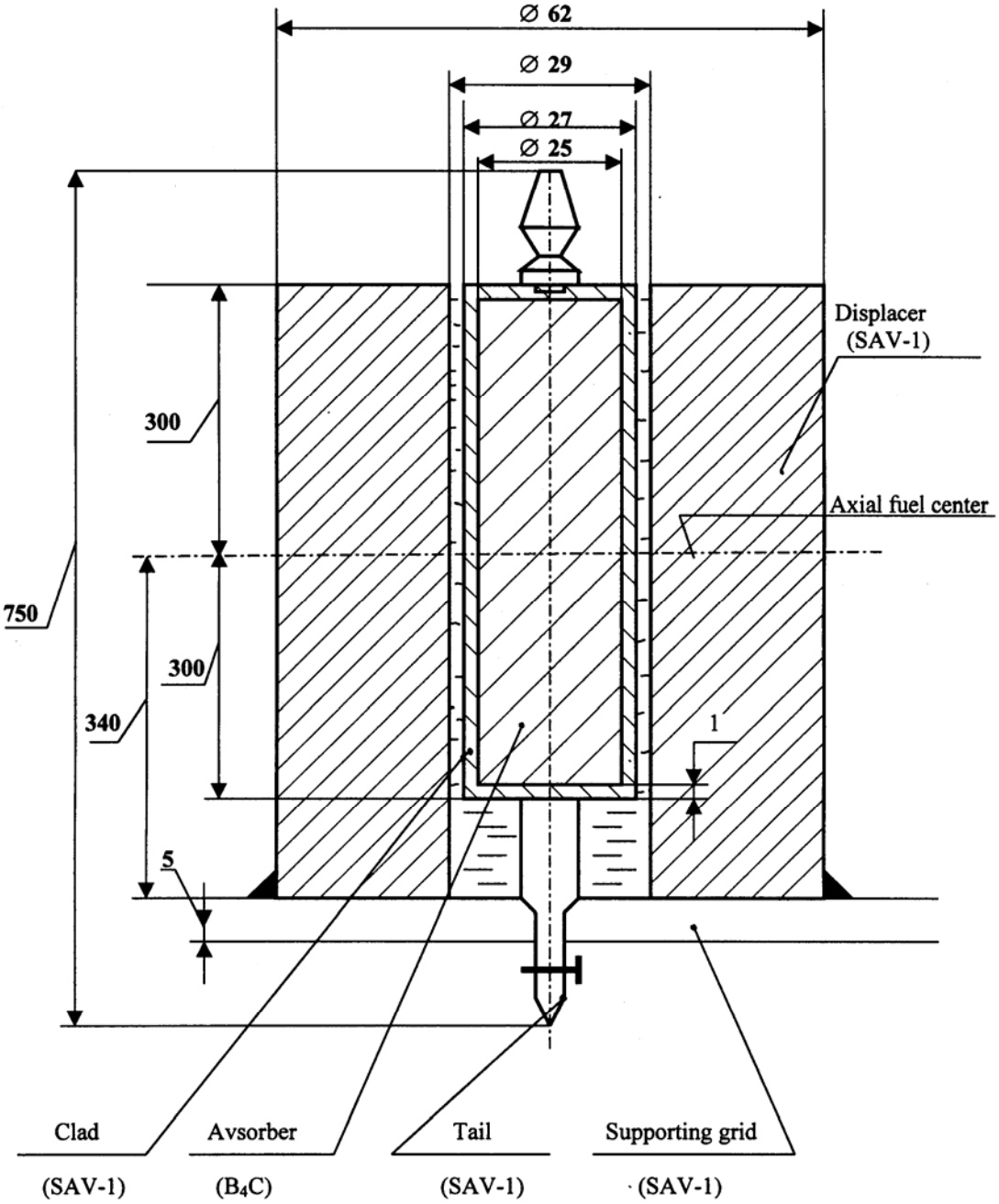

Fig. 5. Absorbing rod and displacer

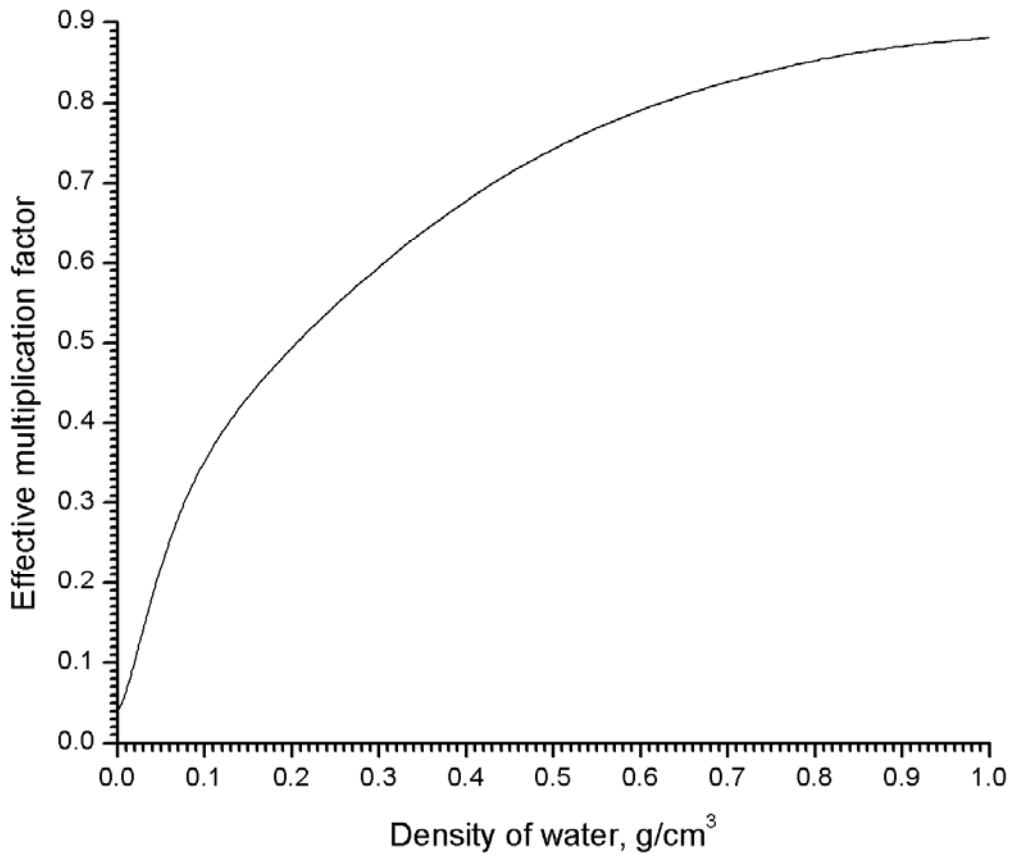

Fig. 6. Dependence of the effective multiplication factor on water density for spent fuel storage

3. Severe accidents

The initial event for maximum design-based accident is considered to be partial blockage of coolant flow across the core with accompanying partial melting of the core. The initial event for beyond-design accident is considered to be full break of the first loop pipe with accompanying full melting of the core. The results of calculation of irradiation doses on the border of sanitary - protective zone (300 m) for LEU equilibrium core are as follows:

	Maximum design-based accident			Beyond-design accident		
Total release of radioactivity, Ci	$7.78 \cdot 10^{3}$ (114%)			$9.53 \cdot 10^{4}$ (110%)		
	GASES	IODINES	SOLS	GASES	IODINES	SOLS
	$7.78 \cdot 10^{3}$ (114%)	0.107 (100%)	0.01 (110%)	$6.12 \cdot 10^{4}$ (116%)	$2.87 \cdot 10^{4}$ (100%)	$5.58 \cdot 10^{3}$ (110%)
Total gamma- and beta-dose for whole body, Rem	$8.9 \cdot 10^{-3}$ (114%)			1.68 (110%)		
Thyroid irradiation dose for children 1-8 years, Rem	$5.52 \cdot 10^{-5}$ (100%)			14.8 (100%)		

The data for low enriched fuel in comparison with current fuel are presented in parenthesis.

In accordance with the Radiation Safety Regulation in Ukraine [8], under normal operation total dose for the whole body should be less than 0.1 Rem/year for population. As we can see, this requirement is satisfied both for LEU and current fuel even in the case of the maximum design-based accident. Preventive actions to protect population in the case of the beyond-design accident should be taken in accordance with the following table [8]:

Preventive action		Prevented dose, Rem			
		Minimum level of propriety		Categorical propriety level	
		for the whole body	thyroid	for the whole body	thyroid
Shelter		0.5	5	5	30
Evacuation		5	30	50	100
Iodine prophylaxy	Children		5		20
	Adults		20		50
Restriction of open-air stay	Children	0.1	2	1	10
	Adults	0.2	10	2	30

As we can see, in the case of the beyond-design accident, categorical propriety level is exceeded both for LEU and current fuel only for such preventive action as restriction of open-air stay for children.

4. Conclusions

The WWR-M research reactor in Kiev (Ukraine) was jointly studied by the Argonne National Laboratory and Kiev Institute for Nuclear Research for conversion from HEU to LEU fuel. Candidate LEU replacement fuel assemblies are LEU WWR-M2 (19.75%), which have been tested successfully in the WWR-M reactor in Gatchina by irradiation to over 75% burnup. The study confirming the feasibility of converting the WWR-M research reactor in Ukraine from HEU to LEU fuel and safety analysis to qualify this LEU fuel for conversion of the WWR-M reactor in Kiev and to get the appropriate license of the Ukrainian Nuclear Regulatory Committee have been completed.

The following accidents were analyzed: spontaneous withdrawal of a control rod bank; incidental falling of a fuel assembly in a cell of the core; partial blockage of coolant flow across the core with accompanying partial melting of the core; full break of the first loop pipe with accompanying full melting of the core. The safety of fresh and depleted HEU and LEU fuel storage was analyzed. The models applied for calculations were validated against measured data, which include critical experiment results for fresh fuel assemblies and measured neutronic distributions in a real WWR-M reactor core. The revised safety documentation for LEU conversion of the WWR-M reactor has been reviewed and approved officially by the State Scientific Technical Center, as requested by the Ukrainian Nuclear Regulatory Committee.

5. Acknowledgements

The work was supported by a contract with the Argonne National Laboratory. We would like to thank James E. Matos and Nelson A. Hanan (RERTR Program) for their assistance.

6. References

1. K. A. KONOPLEV *et al*. LEU WWR-M2 Fuel Qualification, 24-th Intl. Meeting on the Reduced Enrichment for Research and Test Reactors (RERTR 2002), Bariloche, Argentina, November 3-8, 2002.
2. G. A. KIRSANOV *et al*. Hydraulics of the WWR-M Reactor Core, Atomn. Energ., **39**, 5 (1975) 320 (in Russian).
3. I. E. ISAKAS, G. A. KIRSANOV, K. A. KONOPLEV, Thermal Calculation of the WWR-M Reactor Core, Preprint No. 859, Petersburg Nuclear Physics Institute, Gatchina (1983) (in Russian).
4. R. B. POND *et al*. Neutronic Performance of the WWR-M Research Reactor in Ukraine, 24-th Intl. Meeting on the Reduced Enrichment for Research and Test Reactors (RERTR 2002), Bariloche, Argentina, November 3-8, 2002.
5. Y. P. MAHLERS and A. G. DYAKOV, Safety Analysis of the WWR-M Reactor in Ukraine to Allow Operation Using LEU Fuel, Intl. Meeting on the Reduced Enrichment for Research and Test Reactors (RERTR 2004), Vienna, Austria, November 7-12, 2004.
6. Safety Regulation for Storage and Transportation of Nuclear Fuel (PNAEG-14-029-91).

Moscow, 1992 (in Russian).
7. J. F. BRIESMEISTER, Ed., MCNP™ – A General Monte Carlo N-Particle Transport Code, Version 4C, LA-13709-M, Los Alamos National Laboratory (April 2000).
8. Radiation Safety Regulation in Ukraine (NRBU-97). Kiev, 1998 (in Ukrainian).