# A Neutronic Feasibility Study for HEU-LEU conversion of the reactor PIK

**Yu. V. Petrov**[1)], **A. N. Erykalov and M. S. Onegin**[2)]
Petersburg Nuclear Physics Institute of RAS
188350, Gatchina, Leningrad district, Russia
[1)] *yupetrov@thd.pnpi.spb.ru*
[2)] *onegin@thd.pnpi.spb.ru*

Presented at the 2004 International Meeting on
Reduced Enrichment for Research and Test Reactors
November 7-11, 2004
Vienna, Austria

# A Neutronic Feasibility Study for HEU-LEU conversion of the reactor PIK

**Yu. V. Petrov**[1)], **A. N. Erykalov and M. S. Onegin**[2)]
Petersburg Nuclear Physics Institute of RAS
188350, Gatchina, Leningrad district, Russia
[1)] yupetrov@thd.pnpi.spb.ru
[2)] onegin@thd.pnpi.spb.ru

## ABSTRACT

Earlier (Bariloche, 2002) we have shown the possibility of the conversion of reactor PIK from HEU(90%) to MEU(36%) fuel. Monte Carlo calculations have demonstrated that the [$UO_2$(25vol.%)+Cu] meat with density 2.2gU/cm$^3$ could be changed for the [$UO_2$(38vol.%)+Al] meat with 3.6gU/cm$^3$ with noticeable gain in reactor neutronics. The following attempt to reach LEU(19.75%) conversion with UMo(9w.%) meat with Al cladding (instead of stainless steel) failed due to the strains and stresses, which arise in the FE during the working cycle. There is a possibility of the cladding peeling off the meat.

In this talk we suggest for PIK to use [UMo(9w.%)60vol.%+Mg] meat with 9.4gU/cm$^3$ and stainless steel cladding. Thin tubes with such meat were manufactured and used during fifty years as 6% enriched fuel elements in the first Nuclear Power Station of Russia. We plan to perform the Monte Carlo simulations for such PIK-4 FE. In the case of success it would be the first example of HEU-LEU conversion of high-flux reactor without change of core geometry.

## 1. INTRODUCTION

**1.1. Design of the reactor.** The high-flux research nuclear reactor PIK is under construction south of St. Petersburg and 4 km from the town of Gatchina [1-2]. The purpose of this reactor is the study of fundamental properties of matter, investigations of new materials as well as radiobiological and applied research. The reactor is equipped with sources of hot, cold and ultracold neutrons. Its design was described briefly earlier in our report in Barilochi [3]. In this report we show on Fig.1 the design of PIK FE and arrangement of experimental devices in the heavy water reflector on Fig.2. The FE of reactor PIK has a complex geometry. Its diameter is 5.15mm and it has an active length of 500mm. Cladding of the FE is made of stainless steel and the meat of the pin is $UO_2$ in bronze matrix[4]. The standard reactor fuel enrichment in project is 90%. The reactor is equipped with several manual control rods. The central control rod–shutters are situated in the central control rod guide. The absorbing shutters made of hafnium move in opposite directions from the central plane of the core, forming a window $\Delta H$ between the sheets. The 8 equal outer control rods are placed in the reflector tank. The rods are inserted in inclined channels at an angle of 8$^o$ to the vertical. Two rods are used as safety rods (SR) and 6 rods are under manual control. Ten horizontal experimental channels, 6 inclined channels and 6 vertical channels are placed inside the reactor tank (Fig.2). The materials, of which they are made, their sizes and coordinates are given in Ref.[2]. The composition of alloys is also given in Ref.[2]. The volume of heavy water in the tank is about 8.5 m$^3$. The concentration of heavy water is (99.86 ±0.03)%. A source of cold neutrons (CNS) and of hot neutrons (HNS) are also located in the reflector.

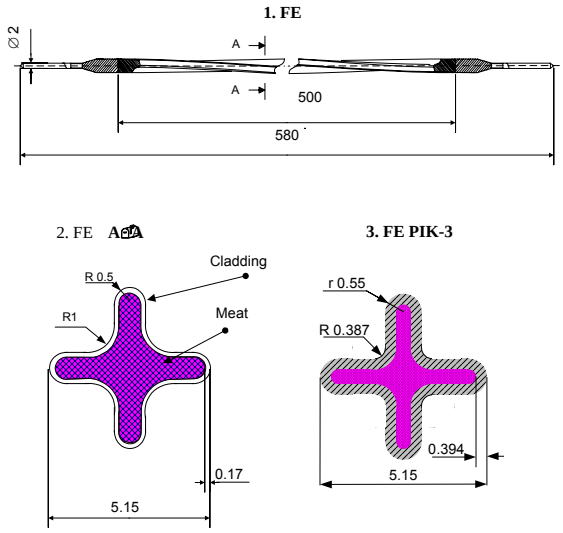


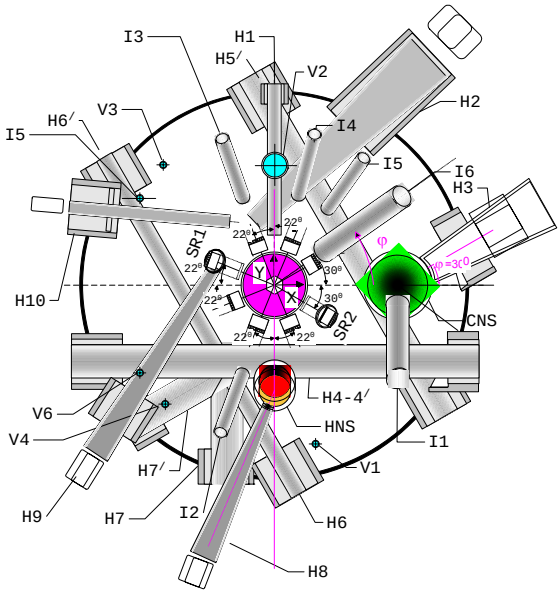


**Fig.1. FE and BAR of PIK reactor [2].** (The dimensions are in mm.)

**Fig.2. Scheme of experimental channels [2].** (Top view.)

Table 1. Standard PIK and PIK-2FE specification (lattice spacing $a$=5.23 mm; cell area $S_c = \sqrt{3}a^2/2 = 23.67\text{mm}^2$; $V_c = 11.84\text{cm}^2$; cell water ratio $\omega_{H_2O} = 0.575$; meat ratio $\omega_M = 0.305$)

| | | Standard PIK | PIK-4 |
|---|---|---|---|
| 1 | Meat | $UO_2$+$Cu$ | $UMo(9w.\%)$+$Mg$ |
| 2 | $^{235}$U enrichment, $\zeta_5$, w.% | 90 | 19.75 |
| 3 | U volume fraction, w.% | 25 | 60 |
| 4 | U meat density, $\gamma_U^M$, g/cm$^3$ | 2.194 | 9.39 |
| 5 | $^{235}$U meat density, g/cm$^3$ | 1.967 | 1.855 |
| 6 | $\gamma_5 = \gamma_U^M \omega_M \zeta_5$, g$^{235}$U/$l$ | 600 | 566 |
| 7 | Matrix material density in meat, g/cm$^3$ | 6.25 | 1.74 |
| 8 | $K_\infty$<br>$\rho_\infty$ % | 1.6176(3)<br>38.18(1) | 1.4679(5)<br>31.88(2) |

**1.2. Methods of Calculation.** The main part of calculations in this report was performed with a new Russian Monte Carlo code MCU REA [5]. The code is designed for the calculations of reactor neutronics. The constants library is significantly expanded there. The new library DLC/MCUDAT-2.2 contains information about 320 nuclides. It is possible to calculate the change of fission fragments and of the burnable absorber isotope concentrations during the reactor cycle. All calculations were done only heterogeneously. In FE's we have separately considered the meat, cladding, water and the FA casing. To find the accuracy of our reactor PIK calculations special experiments were performed at the PIK Mock-up. For 56

experimental criticality assemblies the calculated reactivity deviation from zero is 0.1-0.2%. Code MCNP-4C with ENDF/BVI library gives similar results. Thus the comparison with data of the boron poisoning calculations for the Mock-up with heavy-water reflector demonstrate that code MCU REA can be recommended for calculations of the operating modes of reactor PIK.

## 2. NEW PIK-4 FE

**2.1. PIK-3 FE.** The standard PIK FE withstand large non-uniformities of energy release thanks to the good heat conductivity of the bronze matrix. However the PIK-type meat have at least two shortcomings. First, the copper of bronze strongly absorbes neutrons and reduces the reactor's multiplication factor. Second, in order to achieve a sufficiently high multiplication factor one needs a high uranium concentration $\gamma_5$ in the core. The $UO_2$ composition prevents to increase $\gamma_5$ considerably. The way out is to use weakly absorbing structural materials, such as aluminum or magnisium and UMo alloy. As a material for the heat transport in the meat matrix, aluminum is second after copper. However aluminum interact strongly with UMo fuel particles and especially at higher fuel temperatures. UMo alloy can be used as a meat alone without the matrix at all. In this case to keep the same area of the pin in PIK-3 FE it was used with aluminum cladding of larger thickness (Fig.1). At a power of 100 MW, the temperature of the reactor FE meat goes up to 397C at the center [6]. The temperature of the cladding at the cladding-meat boundary goes up to 272C. The temperature on the FE surface varies from 150C at the end of the edge up to 236C between the edges. The non-uniformity of heat release over the FE perimeter is 1.6. As a result of a poor combination of the heat expansion coefficients of the aluminum cladding and UMo meat, the temperature stresses tend to peel the cladding off the meat in the FE edges. The estimated magnitude of the thermal stresses at the interface between cladding and meat reaches values comparable with the yield stress of aluminum and its alloys. The extensions arising at the boundary, including inelastic strains, provoke a peeling off of the cladding. Therefore it is doubtful that an FE of such a configuration of UMo meat with aluminum cladding can successfully work.

**2.2. PIK-4 FE with LEU (19.75%) fuel.**

Concerning the FE cladding, one can advance two considerations in favour of continuing to use stainless steel: 1. The strength of steel is twice that of aluminum alloys. Aluminum cladding has to be of approximately twice the thickness of steel cladding in order to contain fragments equally well. 2. An important argument in favour of steel FE cladding is the simplicity and reliability of its manufacturing technology: vibratorial compaction [4]. Thus we come to the conclusion, that the FE of reactor PIK with LEU fuel may contain an UMo fuel in magnesium matrix and a steel cladding. The FE with UMo(9w.%) vol.60% meat in magnesium matrix have been used in the first Russian nuclear power plant for about 50 years. The enrichment of uranium is 6%. Up to 50-60% of $^{235}U$ has burnt up during two cycles.

For LEU (19.75%) fuel we choose the meat with (*U*Mo(9w.%) ceramic in *Mg* matrix and exactly the same as PIK HEU geometry (Fig.1). In Table 1, the volume densities of *U* and of *Mg* for $\gamma_5 = 566 g^{235}U/l$ are listed. The multiplication factor for the infinite lattice of infinite PIK-4 LEU FE with LEU (19.75 w.%) fuel is about 17% lower than for infinite lattice of infinite PIK HEU FE (Table 1). For this purpose the new gain of reactivity for the reactor with LEU fuel must be found to provide the same duration of operation cycle.

The new PIK-4 LEU FE's with LEU (19.75%) fuel must be fabricated and tested by various in-pile irradiations. Only thereupon can we recomend the PIK-4 LEU FE for practical use.

## 3. FRESH CORE

**3.1. Fresh core design.** We have studied the cores with standard PIK FE and with UMo in magnesium matrix based new PIK-4 FE. To provide the necessary initial reactivity to the core we exchange the cylindrical stainless steel vessel and housing for aluminum ones. This leads to 4.05(5)% gain in reactivity. The aluminum vessel must be 10 mm thick; the aluminum housing can be 4 mm thick; the $D_2O$ cooling gap remains 4 mm. Additional gain of reactivity is due to the absence of fuel profiling for the LEU case. Otherwise the design of reactor PIK remains the same.

**3.2. Contribution to reactivity of the fresh core components** is shown in Table 2. Aluminum and stainless steel vessels and housing are considered. The initial reactivity excess for the core with PIK-4 FE and aluminum vessel and housing with LEU (19.75%) fuel is about the same at slightly lower concentrations of $^{235}U$ compared to the reference case of standard PIK FE. The worth of 144 BAR's is about 1.4 times higher; the worth of shutters is nearly the same for aluminum vessel and housing. For the steel vessel and housing the weight of 144BAR's is nearly the same while the weight of the shutters is slightly higher. Due to the change of the steel of vessel and housing for aluminum, the worth of 8 control rods is significantly increased (about 3 times).

Table 2. Contribution to $K_{eff}$ and reactivity the fresh core components.

| | | Standard PIK | New core | |
|---|---|---|---|---|
| | Vessel and housing | Stainless steel | Steel | Aluminum |
| | FE type | PIK | PIK-4 | |
| | Meat | *$UO_2$+Cu* | *UMo(9w.%)+Mg* | |
| | Fuel | HEU (90%) | LEU (19.75%) | LEU (19.75%) |
| | $\gamma_5$, g$^{235}U/l$ | 600 | 566 | |
| 1 | Core with trap components, Exp.Fac., fuel profiled, $\rho$, % | 1.1415(5)<br>12.40(4) | 1.0853(4)<br>7.86(3) | 1.1427(4)<br>12.49(3) |
| 2 | With 144 BAR's, $\Delta\rho_{BAR's}$, % | 1.1061(4)<br>–2.80(5) | 1.0515(4)<br>-2.96(5) | 1.0921(4)<br>-4.05(5) |
| 3 | Shutters dropped $\Delta H$=1.2cm, $\Delta\rho_{Sh}$, % | 1.0215(5)<br>–7.49(6) | 0.9604(4)<br>-9.02(6) | 1.0110(4)<br>-7.35(5) |
| 4 | Shutters +6RR+2SR $\Delta\rho_{8CR}$, % | 1.0035(6)<br>–1.76(8) | 0.9409(4)<br>-2.16(6) | 0.9520(4)<br>-6.13(6) |
| 5 | Equilibrium fuel cycle, *fpd* | 24 | -- | 24 |

**3.3. Neutron fluxes for fresh cores** are shown in Table 3. Conversion to LEU fuel leads to lowering of fluxes in reactor by about 8% for thermal neutrons and by about 2% for fast neutrons. The fluxes in the $D_2O$-reflector remain nearly the same. Changing of steel vessel to aluminum one leads to considerable increase of thermal neutron flux at its inner surfase and slightly redused flux in the water trap due to reallocation of the flux. Due to absence of strongly absorbing steel the thermal neutron fluxes in the $D_2O$-reflector are about 30% higher. For the dropped shutter the perturbed thermal flux in the center of the horizontal channel with diameter 8.2 cm is increased up to $\Phi_{th} = 1.3 \cdot 10^{15}$ n/cm$^2$s for aluminum vessel.

Table 3. Thermal ($E$<0.625 eV) $\Phi_{th}$ and fast ($E$>0.8 MeV) $\Phi_F$ neutron fluxes. Regulating rods and shutters are withdrawn.

| | Vessel and housing | Steel | | Steel | | Aluminum | |
|---|---|---|---|---|---|---|---|
| | FE type | PIK HEU (90%) | | PIK-4 LEU (19.75%) | | | |
| | $\gamma_5$, g$^{235}U/l$ | 600 | | 566 | | | |
| | Reactivity excess, $\Delta\rho\uparrow$, % | 9.59(3) | | 2.40(4) | | 6.45(4) | |
| | $\Phi_i$, $10^{14}$ n/cm$^2$s | $\Phi_{th}$ | $\Phi_F$ | $\Phi_{th}$ | $\Phi_F$ | $\Phi_{th}$ | $\Phi_F$ |
| 1 | CEC in trap | 45.6(6) | 7.2(4) | 42.0(5) | 7.0(3) | 39.0(5) | 6.2(3) |
| 2 | Vessel | 3.94(2) | 5.47(2) | 3.62(2) | 5.35(2) | 8.21(4) | 5.77(2) |
| 3 | Horizontal channel H4-4', $D$=8.2 cm | 9.47(7) | 0.14(1) | 9.47(7) | 0.13(1) | 12.0(1) | 0.18(1) |
| 4 | Radial channel H1 | 6.3(1) | 0.24(1) | 6.3(1) | 0.24(1) | 8.2(1) | 0.27(1) |
| 5 | Inclined channel I6 | 5.31(4) | 0.15(1) | 5.24(3) | 0.15(1) | 6.45(3) | 0.17(1) |
| 6 | HNS | 1.99(2) | 0.001 | 2.05(2) | 0.001 | 2.77(2) | 0.001 |

**3.4. LEU fuel operation conditions.** The mean heat flux for the FE in the core is about 3.1 $10^6$W/m$^2$. It is several times higher for the spot point. We also estimate the burnup of uranium. Preliminary estimates show that the operation cycle duration is about 24 days with reloading of ½ of the core during the 7 days shut down. It amounts to 36 MW day/kg U. At the first power plant the maximal heat flux was about 2.1 $10^6$W/m$^2$. Also the maximum burnup of this type of fuel was about 16 MW day/kg at Beloyarsk NPP. Additional in pile irradiation under reasonable conditions is necessary to prove the possibility of using UMo fuel in magnesium matrix as an LEU fuel for reactor PIK.

## CONCLUSIONS

Calculations with Russian MCU REA code of a full scale computer model of the PIK reactor in Gatchina show that the uranium density of 9.4 gU/cm$^3$ of LEU (19.75%) fuel in PIK-4 FE geometry gives worse core neutronics than standard PIK FE with HEU (90%) fuel. The change of reactor vessel and housing to aluminum one lead to considerable increase of reactor neutronics providing nearly the same operating cycle duration as for standard PIK case. The PIK-4 FE with LEU (19.75%) in the same geometry as in reference case of standard PIK FE with HEU (90%) have (*UMo(9w.%)+Mg*) meat and same stainless steel cladding.


## Acknowledgement

It is the pleasant duty to express our thanks to E.A. Gomin, M.I. Gurevich, and M.C. Yudkevich for the kind delivery of code MCU REA.


## References


1. A.N.Erykalov, D.M.Kaminker, K.A.Konoplev, and Yu.V.Petrov. Choice of the basic parameters of the PIK reactor for physics experiments. Preprint PhTI-153, Leningrad, 1968, 27p. (In Russian)
2. A.N.Erykalov, K.A.Konoplev, Yu.V.Petrov, S.L.Smolsky, and A.S.Zakharov. Core and reflector design of reactor PIK. Preprint PNPI-2472, Gatchina, 2002, 28p.
3. Yu.V.Petrov, A.N.Erykalov, M.S.Onegin. The fuel cycle of reactor PIK. *Proceedings of the 2002 International Meeting on Reduced Enrichment for Research and Test Reactors* by Armando Travelli. ANL/TD/TM-03-04, 2003, p.641.

4. V.I.Ageenkov, V.S.Volkov, M.I.Solonin et al. Parameters and manufacture technology of reactor PIK fuel elements. Atomnaya Energiya, **92(6),** 2002, 438-444. (In Russian).
5. E.A.Gomin, M.I.Gurevich, and L.V.Mayorov. Code MCU-REA. Application Description and User Manual. Kurchatov Inst., Moscow, 2001. (In Russian).
6. A.N. Erykalov. Distribution of temperature and stress in PIK-3 fuel elements with uranium-molybdenum meat and aluminum cladding. Preprint PNPI-2524, Gatchina, 2003, 20p.