COURSE OF PIN FUEL TEST IN WWR-M REACTOR CORE

A.S. Zakharov, G.A. Kirsanov, K.A. Konoplev
Petersburg Nuclear Physics Institute
RAS, Gatchina, Leningrad district, 188300, Russia

ABSTRACT

Pin type fuel element (FE) of square form with twisted ribs was developed in VNIINM as an alternative for tube type FE of research reactors.
Two variants of full-scale fuel assemblies (FA) are under test in the core of PNPI WWR-M reactor. One FA contains FE with UO_2 LEU and other – UMo LEU. Both types of FE have an aluminum matrix.
Results of the first stages of the test are presented.

1. Introduction

A number of tube type fuel elements are used in research centers of Russia. The most attractive is an idea to replace them with standardized pin type fuel elements, which are suitable for arrangement of various configurable assemblies. In this case, it will be feasible to supply all reactors by similar, thus more cost-efficient fuel elements. For WWR-M2 and WWR-SM type fuel elements it was succeeded to select pins that retain thermal and neutron reactor parameters (Fig. 1) [1].

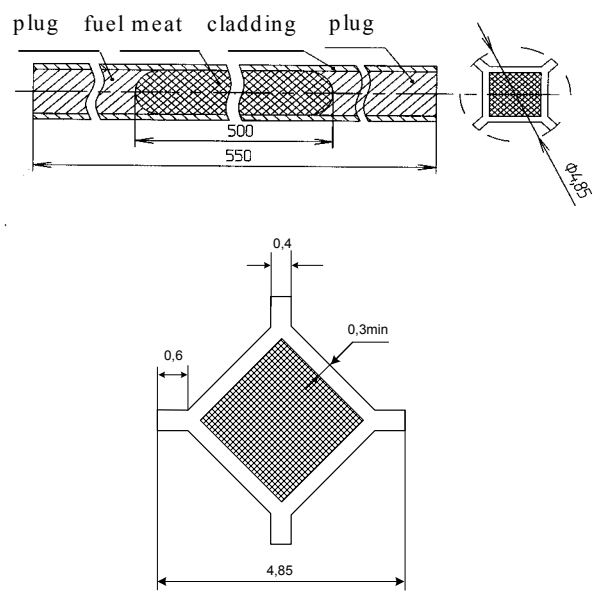

Fig. 1. Pin type fuel element. Longitudinal and cross-sections.

During replacement of WWR-M5 fuel elements with tube type, the loss of specific power is unacceptable. Thus, specific heat-transfer surface is reduced from 6.6 cm^{-1} to (5.4÷4.5) cm^{-1}. FA with pin type FE of small cross-section may be used with shrouds only. In case of small size of FA the volume part occupied by shrouds is considerable. For WWR-M FA with pin type FE the only layout from 37 FE in triangular lattice will be used practically. In this case

the thickness of shroud must be minimal and a circumscribed diameter of FE will be nearly 5.2 mm. That is useable for the number of other reactors. Thin shroud with sufficient strength may be done of zirconium.

For the test on WWR-M reactor pin type FE of circumscribed diameter 4.85 mm were chosen. It is suitable variant for RRT type FA also. FE were placed in triangular lattice but the FA shroud was made from aluminum and had a big thickness. In this case the shroud had the same dimension as the outer FE of WWR-M2 FA. The gaps bettwen of outer WWR-M2 and standard WWR-M5 FE are sufficient for reliable cooling. This circumstance provided the joint operation of testing and standard (WWR-M5) FA without the worse of its cooling conditions.

VNIINM researchers have developed pilot assemblies with pin type FE at LEU for testing in WWR-M reactor in Gatchina [2]. Pin type FE with composition from $U0_2$ and UMo in aluminum matrix have successfully passed pre-reactor tests and are being tested on MIR reactor under loads that exceed standard ones for swimming pool type reactors [2, 3]. The task of this study is to test the structure of FA. Detailed description of FE and preliminary stage of these tests was reported during RERTR-2003 Meeting [4].

2. Fuel assembly structure

FA was developed and manufactured in VNIINM. Thirty seven (37) FE were placed inside hexahedron aluminum alloy shroud of 0.8 mm thickness. Landing stem and the top assembly capture precisely match in size with similar parts of WWR-M2 FA (Fig. 2).

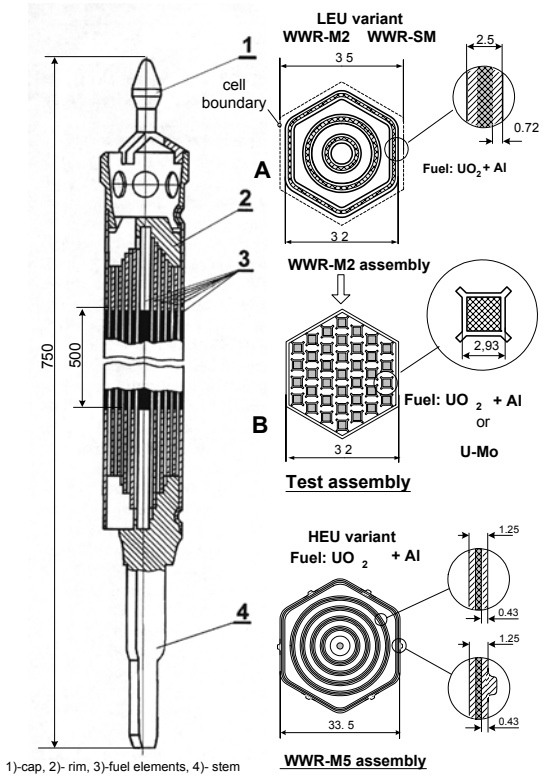

Fig.2. WWR-M2, test and WWR-M5 fuel assemblies

Position of 37 FE is fixed by a lattice in the top part of the assembly and remains free in the bottom part. Spacing between FE shall be provided by close packing of them with contacts between twisted ribs.

In the real condition of sufficiently prolonged operation the examination of some designer's decisions connected with an arrangement of real FE in close packing is necessary. It concerns specifically the substantiation of FE fixing absence in lower lattice. It demands the careful approach of the load increasing during the tests.

Parameters of FE in assemblies are given in Tables below.

Table 1

Parameters of fuel granules

	Uranium-molybdenum alloy	Uranium dioxide
Granules size, μm	160÷60	100÷60
Uranium content, %	90.8	87.13
Enrichment, %	19.7	19.6
Density, g/cm^3	17.23	10

Table 2

Geometrical characteristics of FE

Circumscribed diameter, mm	4.85
Thickness of fin, mm	0.4
Cladding thickness, mm	0.3 min
Square sides, mm	2.93
Length, mm	550.5
Fins twisting step, mm	320
Square section, mm^2	9.0
Fuel meet section, mm^2	5.12
Perimeter, mm	15.6

Table 3

Features of fuel

No	Fuel composition	Average uranium-235 load per FE (g)	Uranium concentration in fuel (g/ cm^3)	Length of fuel meat (mm)	Volume share of fuel component (%)
1	(UMo) + Al	2.62 ± 0.13	5.3	500 ± 20	33.9
2	UO_2 + Al	1.27 ± 0.06	2.7	500 ± 20	31.0

Table 4

Fuel assembly

Characteristics of FA	Fuel UO_2+Al	Fuel (U-9%Mo)+Al
Quantity of FE in a FA	37	37
U-235 content in a FA, g	48.0	93.8
Water flow area, mm^2	467.3	467.3
Cooling surface, m^2	0.288	0.288
Hydraulic diameter, mm	2.74	2.74
Volume of fuel, cm^3	94.8	94.8
Volume share of water	0.523	0.523
Total length of FA, mm	748.5	748.5
Across flats dimension, mm	32	32

3. Procedure and results

Pilot assemblies are loaded in reactor core instead of standard FA of WWR-M5 type (Fig. 3).

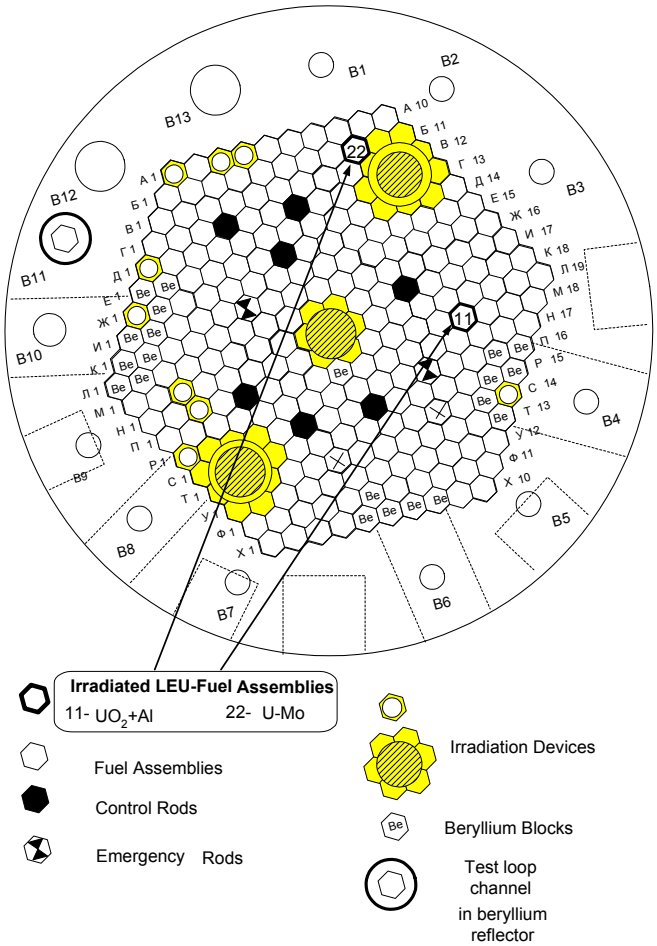

Fig. 3. WWR-M reactor core with pilot assemblies

Cells for loading were selected based on permissible power. Before loading, both pilot assemblies were tested for leak tightness and according to test plan, leak tightness will be periodically tested in the course of test. Leak tightness check is performed in a special loop-type channel on power operation [2, 3].

This method enables to detect leakage of fission fragments from the fuel element at the level of 10^{-7} from generation of fragments in fuel element. Serious leak tightness at the level of $10^{-4} \div 10^{-3}$ may be detected by state of fragment activity in water of the primary circuit and based on readings of standard reactor instruments controlling delayed neutrons.

By autumn 2004, burnup of 24.1% on dioxide fuel and 7,7% on UMo fuel was achieved in pilot assemblies. Both assemblies demonstrated good results. Tests are continued. To achieve 60% burnup under accepted conditions, it is required to have 280 effective days in total for fuel elements with $U0_2$ and 560 days for fuel elements with UMo fuel.

During the tests the specific power in the cell volume 250 kW/l was achieved. With taking into account the volume of FE in the cell the power in fuel space 330 kW/l was achieved for FE with UO_2 fuel, that is typical for pool reactor FA. So, the maximal power foreseen by test program was achieved. Specific power was nearly more than it for the most WWR-M2 FA with tube type HEU FE in spite of the decreasing of heat flux density on the FE surface.

The results of leak tightness tests shows the good condition of pilot FA.

It should be mark that the sizes of tested FA was chosen with the consideration of its loading to reactor active core together with the permanent WWR-M5 FA without change for the worse of neighbouring FA cooling condition. It was the reason of some decreasing of outer shroud sizes . For active cores of WWR-M and WWR-SM reactors from only new FA the distance between the neighbouring FA shrouds may be decrease essentially that will lead to some increasing of FE sizes with conservation of it's manufacturing technology and to better filling of cell volume by FE. It will ensure the specific power increasing nearly on 8%.

The most effective way to accelerate test in several times, it is reasonable to develop a special loop in reactor, but until now we restrained our efforts by principle review of such option. Partial increase of burnup rate may be achieved by reduction of safety factor before boiling, but it requires introduction of more refined calculations in reactor operation. So far, we make raw assessments to possible transition from diffusion model to Monte-Carlo model in weekly calculations of loads. The "simplest" method to accelerate tests is to extend time of reactor operation to 4 thousand hours per year, but until now we have to save money in this aspect.

In conclusion, authors express deep gratitude to R.G. Pikulik, chief engineer of reactor, for his support, L.V. Tedoradze, E.A. Konovalov, D.A. Kapitonov for measurements of leak tightness and G.V. Paneva for giving current calculations of reactor loadings.

4. References

[1] A. Vatulin, A. Morosov, Y. Stetsky, V. Mishunin, A. Fedorov, V. Suprun, Y. Trifonov, V. Sorokin, "Russian RERTR Program: Advanced LEU Fuel Development for Research Reactors", Proceedings of the XXV International Meeting on Reduced Enrichment for Research and Test Reactors, San Carlos de Bariloche, Argentina, November 2002.

[2] A. Vatulin, A. Morosov, Y. Stetsky, V. Suprun, I. Dobrikova, Y. Trifonov, V. Mishunin, V. Sorokin, "Major results on the Development of High Density UMo fuel and Pin-type Fuel Elements Executed under the Russian RERTR Program and in Cooperation with ANL (USA)", Proceedings of the XXVI International Meeting on Reduced Enrichment for Research and Test Reactors, Chicago, Illinois, USA, October 2003.

[3] A. Ijontov, N. Gataulin, V. Pimenov, M. Svyatkin, V. Starkov, "Conditions and Preliminary Results of Low Enrichment UMo Pin-type Fuel Testing in the MIR Reactor", Proceedings of the XXVI International Meeting on Reduced Enrichment for Research and Test Reactors, Chicago, Illinois, USA, October 2003.

[4] G. Kirsanov, K. Konoplev, R. Pikulik, D. Tchmshkyan, L. Tedoradze, A, Zakharov, "Tests of Pin-type Fuel Elements in the WWR-M Reactor", Proceedings of the XXVI International Meeting on Reduced Enrichment for Research and Test Reactors, Chicago, Illinois, USA, October 2003.

[5] K. Konoplev, R. Pikulik, Yu. Saikov, "The control of assembly leak tightness on the WWR-M reactor of LNPI AS of the USSR", Methodical and Applied Investigations of LNPI, Leningrad, 1988 (rus).